CABEX®

THE PERFECT CONNECTION

CABLE GLAND & ACCESSORIES

FOR INDUSTRIAL & HAZARDOUS AREA

CE | ATEX | IECEx | Ex db | Ex eb | Ex ta

PRODUCT BROCHURE

2022-23

Welcome....!

CABEX®
THE PERFECT CONNECTION

CONTENT

01	The Company	04
02	Vision, Mission & Values	06
03	Quality Policy	07
04	Certificates	10
05	Technical Information of Cable Glands	17
06	Index of Industrial Cable Gland	31
07	Index of Hazardous Area Cable Gland	45
08	Index of Ex Thread Conversion & Blanking Plug	55
09	Index of General Accessories	66
10	Index of Cable Ties	73
11	Index of Conduit Fittings & Accessories	78

COMMITTED
TO
Quality

COMMITTED TO VALUE, **COMMITTED TO YOU.**

COMPANY PROFILE

When our legacy started with Accura industries in 1995, Jamnagar, Gujarat, we had no idea how revolutionary this small company would be for the future of the electrical industry. Initially, we started our journey by manufacturing brass precision-turned components and bringing them into the Indian market.

After acquiring Divine Impex (an export-oriented unit), Cabex Group started exporting Brass Electrical Components to Middle Eastern markets in 2006. Following positive feedback from international clients, we have acquired new kinds of equipment and created a new infrastructure using cutting-edge technology.

With the increased demand for ball valves in the domestic and international markets in 2015, Cabex Group introduced another firm to its portfolio under the name of Intact Valves. Equipped with the most modern machinery and technology, intact valves is now one of the renowned brands in India.

In 2018 Cabex Group started manufacturing a broad spectrum of components such as Electrical Cable Terminating Glands and Accessories, Earthing & Lightning Protection Assemblies made from Ferrous, Nonferrous, and Engineering Plastic materials that comply with all relevant regulatory bodies as well as the contractual obligations of our clients. We are one of the fewest companies in India that manufacture and supply electrical components with global accreditation from Atex, IECEx & CE.

Cabex India also enjoys an enviable market presence in countries such as Europe, UK, Australia, the Middle East & Far East, with our products including Industrial and hazardous area Cable Glands, Thread Conversion & Blanking plugs, Earthing & Lightning Protection Accessories. we also manufacture customized electrical components following the requirements of our clients.

We offer a one-stop solution for all the Electrical, Building & Construction, Oil & Gas, Power Plant, Railways, Telecommunication, and various other Industries requirements. Currently, we are operating through our 25,000 sq- ft. modern equipped facility backed by highly experienced technical staff.

Our R & D team focuses primarily on modernizing the technology we utilize in our production process and keeps up with the latest advancements in the electrical industry to create innovative solutions for the current world problems. Our R & D team also assists our sales team in understanding the customer's needs. With our powerful market penetration, quality of products, and quick service, today we have zero defect-free products and the highest levels of customer satisfaction.

OUR VISION, MISSION & VALUES

VISION

To be recognized as an organization for best-of-breed businesses, offering individualized customer service,and manufacturing top-notch quality electrical components while fostering innovation through cutting-edge technology.

MISSION

To establish a strong connection network across the globe for creating a meaningful future, building long-term relationships that endure with our associates and partners to make an impact.

VALUES

Quality:
Manufacturing top-notch quality electrical components.

Unity:
Work together as a team to be pioneers in the electrical industry.

Innovation:
Collaborating and creating solutions through technology.

Commitment:
Constantly strive to provide timely and quality services.

Customer Centricity :
Understanding customer's needs to provide tailored services to specific customer needs.

QUALITY IT'S EVERYONE'S RESPONSBILITY

QUALITY POLICY

CERTIFIED BY ISO 9001:2015 BY TUV NORD & IEC 80079-34 (QAN & QAR) BY DNV

We at Cabex Electrical Components are committed to provide Quality Products & Services that will satisfy the expectations of customers by continuous improvement, understanding customer's specific requirements & prevailing Codes of Practice.

- The latest ERP software is implemented in the company.
- Maintaining records of quality standards.
- R & D according to custom specifications & standards.
- Timely Vendor Evaluations and Audits.
- Inspection by using calibrated (NABL Approved) instruments.
- Mandatory training to all the employees about quality standards.
- Quality plans & stringent QC implementation by following 3 steps inspection to ensure the production of high-quality products.

- **Incoming Inspection:**
  Inspection of raw materials purchased according to established acceptance criteria.
- **In Process Inspection :**
  Hourly production-based inspection in accordance with Control Plans with references to drawings.
- **Final Inspection :**
  With reference to drawings, 100% visualization of finished parts and critical dimensions in accordance with control plans.

export@cabexindia.com

FACILITIES

MANUFACTURING FACILITIES :

Currently, we are operating through our 25,000 sq- ft. modern equipped facility, having a state-of-the-art right from the Forging operation, Single Spindle Automated Machines, CNC Machines, Laser Marking Machines & more than 100 medium to large size Machines backed by experienced & technical expert staff.

RAW MATERIAL :

Our storage facility is maintained in such a manner to manage even emergency orders smoothly & maintain the quality of raw materials and finished goods to minimize manufacturing time & speed up delivery. We have the facility to store a wide range of raw materials such as Brass Rods (Grade: CuZn39Pb2 & CuZn39Pb3), Stainless Steel (SS 316 & 316 L), Aluminum Electrical Grade, Copper 99.9%, Rubber parts of EPDM & Silicone,Engineering Plastic Nylon 66 & PPS etc...

FORGING :

Our forging plant capacity is 100 Metric Ton per month to obtain products of exemplary quality.

MACHINING :

Our fully-equipped machining facility at Cabex enables us to collaborate with several clients across an array of industries.

We believe that no project is too small or too big for us, right from confirmation of order to delivery our agenda is to fulfill the requirements of our clients. For that, we constantly evolve our practices and upgrade software and machines on the shop floor to ensure that the machines can handle and operate even at high tolerance and speed to meet the project's demand.

Our shop floor consists of CNC, VMC, Traub machines, etc.

PLATING :

We acknowledge the importance of plating in inhibiting corrosion, changing conductibility, improving wear, boosting solderability, reducing friction, heat resistance and hardening the material. Our plating process aims at improving the performance of the material which modifies its application in precision machining.

We provide an extensive range of plating including Electro Plating, Electroless Plating,Nickel Plating, Chrome Plating, Copper Plating, etc...,as per the project requirements.

QC & TESTING :

We have Calibrated Instruments in the QC Department for the seamless & smooth quality and inspection process. Our standard quality testing protocol mandates inspection before the materials, components, finished products are assembled, dispatched, and used.

We perform 3 stages of quality testing by our team of experts headed by the quality inspector:

1) Incoming Quality Check of raw materials.

2) Inprocess Quality Check of the machining process.

3) Final Quality Check of finished & assembled products exclusively using NABL-approved and calibrated instruments and in accordance with an approved sampling plan.

PACKAGING & SHIPPING :

We aim to transform the process from buying to shipping into a world-class experience for our customers. We ship our products in corrugated boxes, palletized with proper labeling and marking as per the customer's requirement.

We ship our products from Kandla port, Mundra port, Nhava Sheva port, Ahmedabad airport, and Mumbai airport, enabling us to ship and export worldwide.

IECEx Certificate of Conformity

INTERNATIONAL ELECTROTECHNICAL COMMISSION
IEC Certification System for Explosive Atmospheres

for rules and details of the IECEx Scheme visit www.iecex.com

Certificate No.:	**IECEx DNV 22.0002X**	Page 1 of 3	Certificate history:
Status:	**Current**	Issue No: 0	
Date of Issue:	2022-04-20		
Applicant:	**Cabex Electrical Components** Plot No.4, GIDC, Phase-II, Dared, Jamnagar, Gujarat, 361 004 **India**		
Equipment:	**A Range of Compression Type Cable Glands**		
Optional accessory:			
Type of Protection:	**Ex d, Ex e, Ex t**		
Marking:	Ex db I Mb / Ex eb I Mb Ex db IIC Gb / Ex eb IIC Gb Ex ta IIIC Da		

Ambient temperature:

-40°C ≤ Ta ≤ + 85°C 1) or

-55°C ≤ Ta ≤ + 175°C 2)

1) -40°C ≤ Ta ≤ + 85°C ambient temperature range is applicable for cable glands with EPDM thermoset seal, Nylon skid washer and Nylon IP washer.

2) -55°C ≤ Ta ≤ + 175°C ambient temperature range is applicable for cable glands with Silicon thermoset seal, PPS skid washer and Silicon O ring.

Approved for issue on behalf of the IECEx Certification Body:	**Asle Kaastad**
Position:	**Certification Manager**
Signature: (for printed version)	Asle Kaastad
Date: (for printed version)	2022-04-20

1. This certificate and schedule may only be reproduced in full.
2. This certificate is not transferable and remains the property of the issuing body.
3. The Status and authenticity of this certificate may be verified by visiting www.iecex.com or use of this QR Code.

Certificate issued by:

DNV Product Assurance AS
Veritasveien 1
1363 Høvik
Norway

DNV

DNV

[1]

EU-TYPE EXAMINATION CERTIFICATE

[2] Product Intended for use in Potentially Explosive Atmospheres Directive 2014/34/EU

[3] EU-Type Examination Certificate Number: **DNV 22 ATEX 73142X** **Issue 0**

[4] Product: **A Range of Compression Type Cable Glands**

[5] Manufacturer: **Cabex Electrical Components**

[6] Address: **Plot No.4, GIDC, Phase-II,**
Dared, Jamnagar-361 004, Gujarat, INDIA.

[7] This product and any acceptable variation thereto is specified in the schedule to this certificate and the documents therein referred to.

[8] DNV Product Assurance AS, notified body number 2460, in accordance with Article 17 and Article 21 of Directive 2014/34/EU of the European Parliament and of the Council, dated 26 February 2014, certifies that this product has been found to comply with the Essential Health and Safety Requirements relating to the design and construction of products intended for use in potentially explosive atmospheres, given in Annex II to the Directive.

The examination and test results are recorded in confidential reports listed in item 16.

[9] Compliance with the Essential Health and Safety Requirements has been assured by compliance with:
EN IEC 60079-0:2018, EN 60079-1: 2014, EN 60079-7: 2015 and EN 60079-31: 2014

Where additional criteria beyond those given here have been used, they are listed at item 18 in the Schedule.

[10] If the sign "X" is placed after the certificate number, it indicates that the product is subject to the Specific Conditions of Use specified in the schedule to this certificate.

[11] This EU-TYPE EXAMINATION CERTIFICATE relates only to the design and construction of the specified product in accordance to the Directive 2014/34/EU. Further requirements of the Directive apply to the manufacturing process and supply of this product. These are not covered by this certificate.

[12] The marking of the product shall include the following:

Ex	**I M2**	**Ex db I Mb / Ex eb I Mb**
	II 2 G	**Ex db IIC Gb / Ex eb IIC Gb**
	II 1 D	**Ex ta IIIC Da**

Date of issue:
2022-04-20

NORSK AKKREDITERING
PROD 021

Asle Kaastad
For DNV Product Assurance AS
The Certificate has been digitally signed.
See www.dnv.com/digitalsignatures for info

This certificate may only be reproduced in its entirety and without any change, schedule included.

IECEx Certificate of Conformity

INTERNATIONAL ELECTROTECHNICAL COMMISSION
IEC Certification System for Explosive Atmospheres

for rules and details of the IECEx Scheme visit www.iecex.com

Certificate No.:	**IECEx DNV 22.0003X**	Page 1 of 3	Certificate history:
Status:	**Current**	Issue No: 0	
Date of Issue:	2022-04-01		
Applicant:	**Cabex Electrical Components** Plot No.4, GIDC, Phase-II, Dared, Jamnagar, Gujarat, 361 004 **India**		
Equipment:	**Reducers and Adaptors**		
Optional accessory:			
Type of Protection:	**Ex d, Ex e, Ex t**		
Marking:	Ex db I Mb / Ex eb I Mb Ex db IIC Gb / Ex eb IIC Gb Ex ta IIIC Da -40°C ≤ Ta ≤ + 100°C 1) or -55°C ≤ Ta ≤ + 175°C 2)		

1) -40°C ≤ Ta ≤ + 100°C ambient temperature range is applicable for accessories with Nylon66 IP washer.

2) -55°C ≤ Ta ≤ + 175°C ambient temperature range is applicable for accessories with Silicone "O"ring.

Approved for issue on behalf of the IECEx Certification Body:	**Asle Kaastad**
Position:	**Certification Manager**
Signature: (for printed version)	Asle Kaastad
Date: (for printed version)	2022-04-01

1. This certificate and schedule may only be reproduced in full.
2. This certificate is not transferable and remains the property of the issuing body.
3. The Status and authenticity of this certificate may be verified by visiting www.iecex.com or use of this QR Code.

Certificate issued by:

DNV Product Assurance AS
Veritasveien 3
1363 Hovik .
Norway

DNV

DNV

[1]

EU-TYPE EXAMINATION CERTIFICATE

[2] Product Intended for use in Potentially Explosive Atmospheres Directive 2014/34/EU

[3] EU-Type Examination Certificate Number: **DNV 22 ATEX 16166X** **Issue 0**

[4] Product: **Reducers and Adaptors**

[5] Manufacturer: **Cabex Electrical Components**

[6] Address: **Plot No.4, GIDC, Phase-II,**
Dared, Jamnagar-361 004, Gujarat, INDIA.

[7] This product and any acceptable variation thereto is specified in the schedule to this certificate and the documents therein referred to.

[8] DNV Product Assurance AS, notified body number 2460, in accordance with Article 17 and Article 21 of Directive 2014/34/EU of the European Parliament and of the Council, dated 26 February 2014, certifies that this product has been found to comply with the Essential Health and Safety Requirements relating to the design and construction of products intended for use in potentially explosive atmospheres, given in Annex II to the Directive.

The examination and test results are recorded in confidential reports listed in item 16.

[9] Compliance with the Essential Health and Safety Requirements has been assured by compliance with:
EN IEC 60079-0:2018, EN 60079-1: 2014, EN 60079-7: 2015 and EN 60079-31: 2014

Where additional criteria beyond those given here have been used, they are listed at item 18 in the Schedule.

[10] If the sign "X" is placed after the certificate number, it indicates that the product is subject to the Specific Conditions of Use specified in the schedule to this certificate.

[11] This EU-TYPE EXAMINATION CERTIFICATE relates only to the design and construction of the specified product in accordance to the Directive 2014/34/EU. Further requirements of the Directive apply to the manufacturing process and supply of this product. These are not covered by this certificate.

[12] The marking of the product shall include the following:

Ex

I M2	**Ex db I Mb / Ex eb I Mb**
II 2 G	**Ex db IIC Gb / Ex eb IIC Gb**
II 1 D	**Ex ta IIIC Da**

Date of issue:
2022-04-01

NORSK AKKREDITERING
PROD 021

Asle Kaastad
For DNV Product Assurance AS
The Certificate has been digitally signed.
See www.dnv.com/digitalsignatures for info

This certificate may only be reproduced in its entirety and without any change, schedule included.

IECEx Certificate of Conformity

INTERNATIONAL ELECTROTECHNICAL COMMISSION
IEC Certification System for Explosive Atmospheres

for rules and details of the IECEx Scheme visit www.iecex.com

Certificate No.:	**IECEx DNV 22.0004X**	Page 1 of 3	Certificate history:
Status:	**Current**	Issue No: 0	
Date of Issue:	2022-03-31		
Applicant:	**Cabex Electrical Components** Plot No.4, GIDC, Phase-II, Dared, Jamnagar, Gujarat, 361 004 **India**		
Equipment:	**Stopping Plugs**		
Optional accessory:			
Type of Protection:	**Ex d, Ex e, Ex t**		
Marking:	Ex db I Mb / Ex eb I Mb Ex db IIC Gb / Ex eb IIC Gb Ex ta IIIC Da **Degrees of protection (IP Code)** IP 66/ IP 68 (30 meter, 7 days) **Ambient temperature:** -40°C ≤ Ta ≤ +100°C[1)] or -55°C ≤ Ta ≤ +175°C[2)] 1) -40°C ≤ Ta ≤ +100°C ambient temperature range is applicable for stopping plugs with Nylon 66 IP washer. 2) -55°C ≤ Ta ≤ +175°C ambient temperature range is applicable for stopping plugs with Silicone "O"ring and NPT threaded stopping plugs for threaded entry points.		

Approved for issue on behalf of the IECEx Certification Body:	**Asle Kaastad**
Position:	**Certification Manager**
Signature: (for printed version)	Asle Kaastad
Date: (for printed version)	2022-03-31

1. This certificate and schedule may only be reproduced in full.
2. This certificate is not transferable and remains the property of the issuing body.
3. The Status and authenticity of this certificate may be verified by visiting www.iecex.com or use of this QR Code.

Certificate issued by:

DNV Product Assurance AS
Veritasveien 3
1363 Hovik .
Norway

DNV

DNV

[1]

EU-TYPE EXAMINATION CERTIFICATE

[2] Product Intended for use in Potentially Explosive Atmospheres Directive 2014/34/EU

[3] EU-Type Examination Certificate Number: **DNV 22 ATEX 16409X** **Issue 0**

[4] Product: **Stopping Plugs**

[5] Manufacturer: **Cabex Electrical Components**

[6] Address: **Plot No.4, GIDC, Phase-II,**
Dared, Jamnagar-361 004, Gujarat, INDIA.

[7] This product and any acceptable variation thereto is specified in the schedule to this certificate and the documents therein referred to.

[8] DNV Product Assurance AS, notified body number 2460, in accordance with Article 17 and Article 21 of Directive 2014/34/EU of the European Parliament and of the Council, dated 26 February 2014, certifies that this product has been found to comply with the Essential Health and Safety Requirements relating to the design and construction of products intended for use in potentially explosive atmospheres, given in Annex II to the Directive.

The examination and test results are recorded in confidential reports listed in item 16.

[9] Compliance with the Essential Health and Safety Requirements has been assured by compliance with:
EN IEC 60079-0:2018, EN 60079-1: 2014, EN 60079-7: 2015 and EN 60079-31: 2014

Where additional criteria beyond those given here have been used, they are listed at item 18 in the Schedule.

[10] If the sign "X" is placed after the certificate number, it indicates that the product is subject to the Specific Conditions of Use specified in the schedule to this certificate.

[11] This EU-TYPE EXAMINATION CERTIFICATE relates only to the design and construction of the specified product in accordance to the Directive 2014/34/EU. Further requirements of the Directive apply to the manufacturing process and supply of this product. These are not covered by this certificate.

[12] The marking of the product shall include the following:

Ex **I M2** **Ex db I Mb / Ex eb I Mb**
II 2 G **Ex db IIC Gb / Ex eb IIC Gb**
II 1 D **Ex ta IIIC Da**

Date of issue:
2022-03-31

NORSK AKKREDITERING
PROD 021

Asle Kaastad
For DNV Product Assurance AS
The Certificate has been digitally signed.
See www.dnv.com/digitalsignatures for info

This certificate may only be reproduced in its entirety and without any change, schedule included.

TÜV NORD

CERTIFICATE

Management system as per

ISO 9001 : 2015

The Certification Body TÜV INDIA hereby confirms as a result of the audit, assessment and certification decision according to ISO/IEC 17021-1:2015, that the organization

CABEX ELECTRICAL COMPONENTS
Plot No. 4, GIDC Phase -II, Dared,
Jamnagar - 361 004,
Gujarat,
India

operates a management system in accordance with the requirements of ISO 9001:2015 and will be assessed for conformity within the 3 year term of validity of the certificate.

Scope -

Design, Manufacture and Supply of Electrical Cable Terminating Glands & Accessories, Earthing and Lightning Protection Accessories, Components & Assemblies made from Ferrous, Nonferrous and Engineering Plastic Materials

Certificate Registration No. **QM 02 01554**
Audit Report No. **Q 10894/2021**

Valid from **06.08.2021**
Valid until **05.08.2024**

Certification Body
at TÜV INDIA PVT. LTD.

Mumbai, **06.08.2021**

TUV India Pvt. Ltd., 801, Raheja Plaza – 1, L.B.S. Marg, Ghatkopar (W), Mumbai - 400 086, India cert.helpdesk@tuvindia.co.in

Introduction of Cable Gland	12 to 13
Technical - Industrial Cable Gland	14 to 15
Technical - Hazardous Area Cable Gland	16 to 23

export@cabexindia.com

Cable Glands

Cable glands are defined as "mechanical cable entry devices" which are used in conjunction with cable and wiring for electrical, instrumentation and control, automation systems, including lighting, power, data and telecoms.

The main functions of the Cable Gland are to act as a sealing and terminating device to ensure the protection of electrical equipments and enclosures, including the provision of :

1) **Environmental protection -**
By sealing on the outer cable sheath, excluding dust and moisture from the electrical or instrument enclosure.

2) **Earth Continuity -**
In the case of armoured cables, when the cable gland has a metallic construction. In this case cable glands may be tested to ensure that they can withstand an appropriate peak short circuit fault current.

3) **Holding force -**
To ensure adequate levels of mechanical cable pull out resistance on the cable.

4) **Additional sealing -**
Entering the enclosure, when a high degree of ingress protection is required on the part of the cable.

5) **Additional environmental sealing -**
Maintaining the ingress protection rating of the enclosure with the selection of applicable accessories dedicated to performing this function at the cable entry point.

www.cabexindia.com

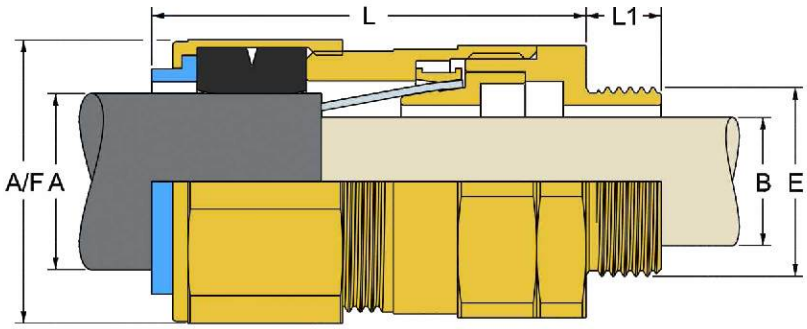

CABLE GLANDS

Selection of Cable Gland

Glands should be selected on following Points when the Cable is Armoured:

1) The Type, Size & Material of the Cable Armour.
2) The Diameter of the Cable Inner Bedding (where present).
3) The Size of the Overall Cable Diameter.
4) The Type and Size of the Cable entry hole in the mating electrical equipment.
5) The wall thickness of the Enclosure or Gland Plate, as a longer Cable Gland Thread may be required.
6) The material of the mating electrical enclosures to eliminate dissimilar metals where possible.
7) The Ingress Protection rating of the electrial equipment or site standard required to be maintained.
8) If any entry thread sealing washer is required to meet the Ingress Protection rating.
9) Whether a Single Seal or Double Seal Cable Gland is required.
10) If fixing accessories such as Lock nut, Earth Tag, Shroud, Adaptor, Reducer, Stopping Plug etc...are required.

There can be two types of cable glands

1) **Unarmoured Cable Gland:**
   Unarmoured Cable will require an outer seal within Gland to provide ingress protection but also a degree of retention.

2) **Armoured Cable Gland:**
   The gland that needs a clamping mechanism to terminate the Armour both mechanically and electrically.

Cable Gland Primary Code for Unarmoured and Armoured Cables

Code	Seal Type
A2	Single Inner Seal
B	No Seal
C	Single Outer Seal
E	Double Seal (Inner & Outer)

export@cabexindia.com

There are various types of Cable Glands & Accessories manufactured around the world as per different standards and applications.

We CABEX manufacturing different Industrial Cable Glands & Accessories as per below:

Available in multiple dimensions, thread forms and materials; CABEX Cable Glands conform to the latest international standards — including BS EN 62444, IEC 62444 and the more rigorous BS 6121:Part 1:1989.

Industrial Cable Glands

Type	Application
A2	Used with all types of Unarmoured & Braided cable for Indoor & Outdoor use, providing mechanical cable retention and an environmental seal on the cable Outer Sheath.
BWL	Used with all types of Single Wire Armour (SWA) & Aluminium Wire Armour (AWA) cable without Seal for Indoor use, providing mechanical cable retention and Electrical continuity via armour wire termination.
CW	Used with all types of Single Wire Armour (SWA) & Aluminium Wire Armour (AWA) cable for Indoor & Outdoor use, providing mechanical cable retention and Electrical continuity via armour wire termination and an environmental seal on the cable Outer Sheath.
CX	Used with all types of Wire Braid Armour, Strip Armour, Pilliable Wire Armour, Steel Tape Armour cable for Indoor & Outdoor use, providing mechanical cable retention and Electrical Continuity via armour wire termination and an environmental seal on the cable Outer Sheath.
E1W	Used with all types of Single Wire Armour (SWA) & Aluminium Wire Armour (AWA) cable for Indoor & Outdoor use, providing mechanical cable retention and Electrical continuity via armour wire termination and an environmental seal on the cable Inner Bedding & Outer Sheath.
E1X	Used with all types of Wire Braid Armour, Strip Armour, Pilliable Wire Armour, Steel Tape Armour cable for Indoor & Outdoor use, providing mechanical cable retention and Electrical Continuity via armour wire termination and an environmental seal on the cable Inner Bedding & Outer Sheath.
WIPPING	Used to facilitate the termination of high voltage power cables. Used in dry Indoor and Outdoor conditions.

Industrial-Thread Conversion & Blanking Plug

Type	Application
ADAPTOR HEX HEAD	Change smaller thread to larger thread when there is a disconnect between the type or size of the Cable Gland thread and the cable entry hole in the equipment.
REDUCER HEX HEAD	Change larger thread to smaller thread when there is a disconnect between the type or size of the Cable Gland thread and the cable entry hole in the equipment.
STOPPING PLUG HEX HEAD	To close unused Cable Gland entries temporary or permanently & maintain the intergrity of the equipments.

www.cabexindia.com

General Accessories

Type	Application
EARTH TAG	Earth Tags are installed between the cable gland and equipment to provide earth bond connection.
LOCK NUT	Lock nuts are used for securing cable glands in position, and are used on the cable gland entry thread.
SERRATED WASHER	Fitted inside the equipment before Locknut as anti vibration device to prevent loosening the Cable Gland from the equipment.
NYLON & FIBER WASHER	Fit at entry thread at entrance of Cable Gland to equipment to maintain the Ingress Protection Rating and Code of Protection.
SHROUD	Keeping the surface of the Cable Gland free from the build-up of dust or dirt and retain unwanted moisture.

Matrix of Industrial Cable Gland

Cable Gland Type	Unarmoured Cables	Armoured Cables					Sealing Technique			Ingress Protection			High Temprature Option
	Normal	SWA**	PWA	STA	Wire Braid	Strip	No Seal	Inner Seal	Outer Seal	IP 66	IP 67	IP 68*	Up to 180°C
BWL		●					●						
A2	●								●	●			
CW		●							●	●			
CX			●	●	●	●			●	●			
E1W		●						●	●	●			
E1X			●	●	●	●		●	●	●			

SWA Single Wire Armour

PWA Piliable Wire Armour

STA Steel Tape Armour

● **STANDARD**

OPTIONAL

*IP 68 ratings are qualified with depth of water and duration of test. Please refer to individual product pages.
** SWA includes both Steel Wire Armour and Aluminium Wire Armour.

export@cabexindia.com

There are various types of Cable Glands & Accessories manufactured around the world as per different standards and applications.

We CABEX manufacturing different Ex Cable Gland & Accessories as per below:

Available in multiple dimensions, thread forms and materials; CABEX Cable Glands conform to the latest international standards — including BS EN 62444, IEC 62444 and the more rigorous BS 6121:Part 1:1989.

Ex Cable Glands

Type	Application
A2F	Certified in Flamproof (Type 'db'), Increased Safety (Type 'eb') & Dust Ignition protection (Type 'ta') for Indoor & Outdoor use in Zone 1,2,20,21 & 22 hazardous areas with Unarmoured & Braided Cable providing a combined Flameproof Seal & an Environmental Seal on the cable Outer Sheath. This Cable Gland for Group II & III.
CFU	Certified in Increased Safety (Type 'eb') & Dust Ignition protection (Type 'ta') for Indoor & Outdoor use in Zone 1,2,20,21 & 22 hazardous areas with all types of Armoured Cable providing an Environmental Seal on the cable Outer Sheath. Also providing Mechanical Cable Retention & an Electrical Continuity via armour wire termination. This Cable Gland for Group I, II & III.
E1FU	Certified in Flamproof (Type 'db'), Increased Safety (Type 'eb') & Dust Ignition protection (Type 'ta') for Indoor & Outdoor use in Zone 1,2,20,21 & 22 hazardous areas with all Armour Cable providing a combined Flameproof Seal & an Environmental Seal on the cable Inner Bedding & Outer Sheath. Also providing Mechanical Cable Retention & an Electrical Continuity via armour wire termination. This Cable Gland for Group I, II & III.
A2F-HT	Certified in Flamproof (Type 'db'), Increased Safety (Type 'eb') & Dust Ignition protection (Type 'ta') for Indoor & Outdoor use in Zone 1,2,20,21 & 22 hazardous areas with Unarmoured & Braided Cable providing a combined Flameproof Seal & an Environmental Seal on the cable Outer Sheath. This Cable Gland for Group II & III. This is a High Temperature Cable Gland.
CFU-HT	Certified in Increased Safety (Type 'eb') & Dust Ignition protection (Type 'ta') for Indoor & Outdoor use in Zone 1,2,20,21& 22 hazardous areas with all types of Armoured Cable providing an Environmental Seal on the cable Outer Sheath. Also providing Mechanical Cable Retention & an Electrical Continuity via armour wire termination. This Cable Gland for Group I, II & III. This is a High Temperature Cable Gland.
E1FU-HT	Certified in Flamproof (Type 'db'), Increased Safety (Type 'eb') & Dust Ignition protection (Type 'ta') for Indoor & Outdoor use in Zone 1,2,20,21 & 22 hazardous areas with all Armour Cable providing a combined Flameproof Seal & an Environmental Seal on the cable Inner Bedding & Outer Sheath. Also providing Mechanical Cable Retention & an Electrical Continuity via armour wire termination. This Cable Gland for Group I, II & III. This is a High Temperature Cable Gland.

Ex Thread Conversion & Blanking Plug

Type	Application
Ex ADAPTOR	Change smaller thread to larger thread when there is a disconnect between the type or size of the Cable Gland thread and the cable entry hole in the equipment.
Ex REDUCER	Change larger thread to smaller thread when there is a disconnect between the type or size of the Cable Gland thread and the cable entry hole in the equipment.
Ex STOPPING PLUG- (1) FLAT HEAD (2) DOME HEAD (3) HEX HEAD (4) TEMPERPROOF INTERNAL (5) NON -TEMPERPROOF EXTERNAL	To close unused Cable Gland entries temporary or permanently & maintain the intergrity of the equipments.

www.cabexindia.com

General Accessories

Type	Application
EARTH TAG	Earth Tags are installed between the cable gland and equipment to provide earth bond connection.
LOCK NUT	Lock nuts are used for securing cable glands in position, and are used on the cable gland entry thread.
SERRATED WASHER	Fitted inside the equipment before Locknut as anti vibration device to prevent loosening the Cable Gland from the equipment.
NYLON & FIBER WASHER	Fit at entry thread at entrance of Cable Gland to equipment to maintain the Ingress Protection Rating and Code of Protection.
SHROUD	Keeping the surface of the Cable Gland free from the build-up of dust or dirt and retain unwanted moisture.

Matrix of Ex Cable Glands

Cable Gland Type	Unarmoured Cables	Armoured Cables					Sealing Technique			Ingress Protection		High Temprature Option	Enclosure Protection		
	Normal	SWA**	PWA	STA	Wire Braid	Strip	No Seal	Inner Seal	Outer Seal	IP 66	IP 68*	Up to 175°C	Ex d	Ex e	Ex t
A2F	✪								✪	✪	✪		✪	✪	✪
CFU		✪	✪	✪	✪	✪			✪	✪	✪			✪	✪
E1FU		✪	✪	✪	✪	✪		✪	✪	✪	✪		✪	✪	✪
A2F-HT	✪								✪	✪	✪	✪	✪	✪	✪
CFU-HT		✪	✪	✪	✪	✪			✪	✪	✪	✪		✪	✪
E1FU-HT		✪	✪	✪	✪	✪		✪	✪	✪	✪	✪	✪	✪	✪

SWA Single Wire Armour

PWA Piliable Wire Armour

STA Steel Tape Armour

✪ **STANDARD**

* IP 68 ratings are qualified with depth of water and duration of test. Please refer to individual product pages.
** SWA includes both Steel Wire Armour and Aluminium Wire Armour.

export@cabexindia.com

Introduction of Hazardous Area

An area in which an **explosive atmosphere** is present,or may be expected to be present in quantities such as to require special precautions for the construction,installation and use of electrical apparatus.

In order to protect personal and equipment from potential explosions the principle of hazardous area classification is used this involves risk assessing the plant area and defining areas according to the type of flammable material and the probability of its release to create an explosive atmosphere.

Definition of "Explosive atmosphere"

Mixture with air,under **atmospheric conditions,**of flammable substances in the form of gas, vapour,dust,fibres or flyings which,after ignition,permits a self-sustaining propagation.

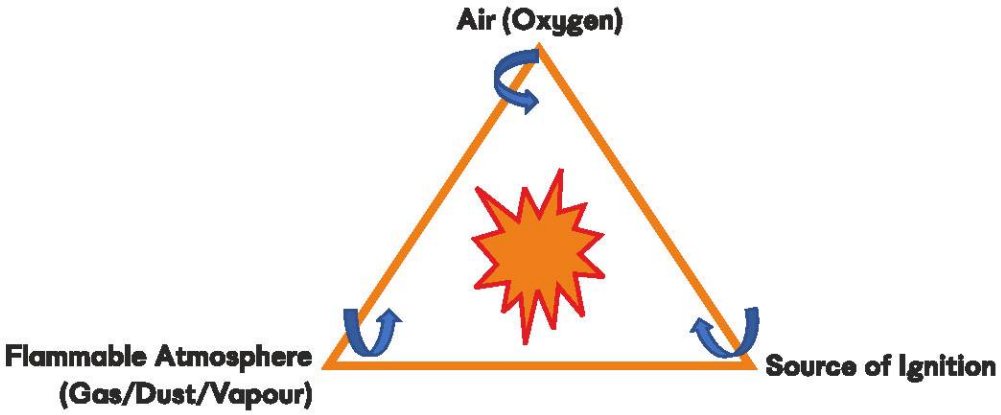

Standard atmospheric condition (according to IEC 60079-0)

- Temperature –20 °C to +60 °C.
- Pressure 80 kPa (0.8 bar) to 110 kPa (1.1 bar).
- Air with normal oxygen content, generally 21% / vol.

www.cabexindia.com

Classification of Hazardous Areas according to IEC 60079-10

The hazardous areas are sub-divided into Zones:

Combustible Gases & Vapours

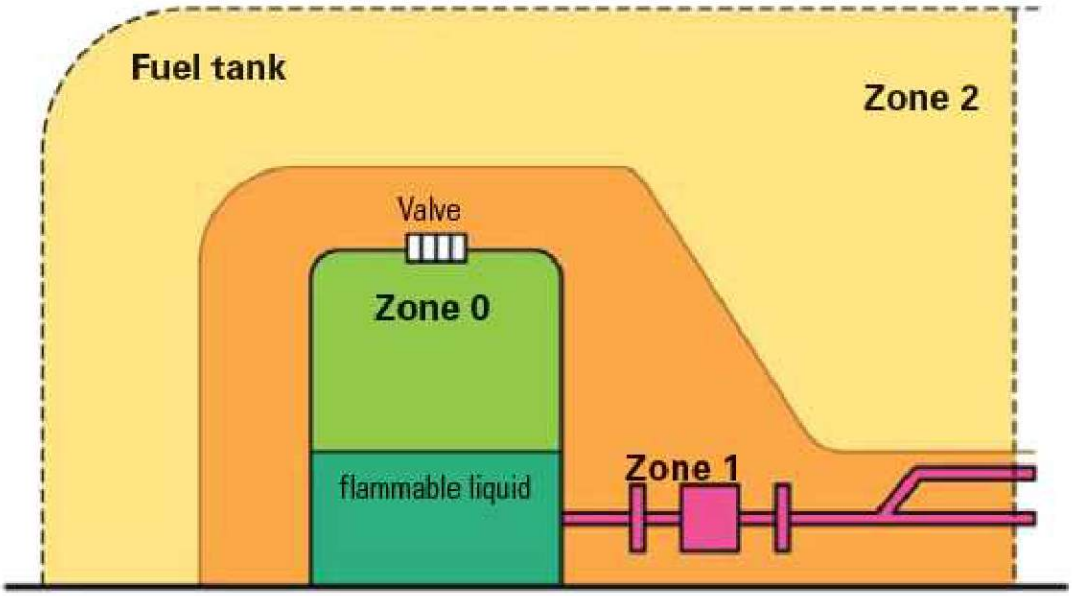

FIGURE A

Zone 0

Area in which an explosive atmosphere consisting of a mixture of air with flammable substances in the form of gas, vapour or mist is present continuously or for long periods or frequently.

Zone 1

Area in which an explosive atmosphere consisting of a mixture of air with flammable substances in the form of gas, vapour or mist is likely to occur in normal operation or occasionally.

Zone 2

Area in which an explosive atmosphere consisting of a mixture of air with flammable substances in the form of gas, vapour or mist is not likely to occur in normal operation but, if it does occur, persists for a short period only.

export@cabexindia.com

Combustible Dust & Fibres

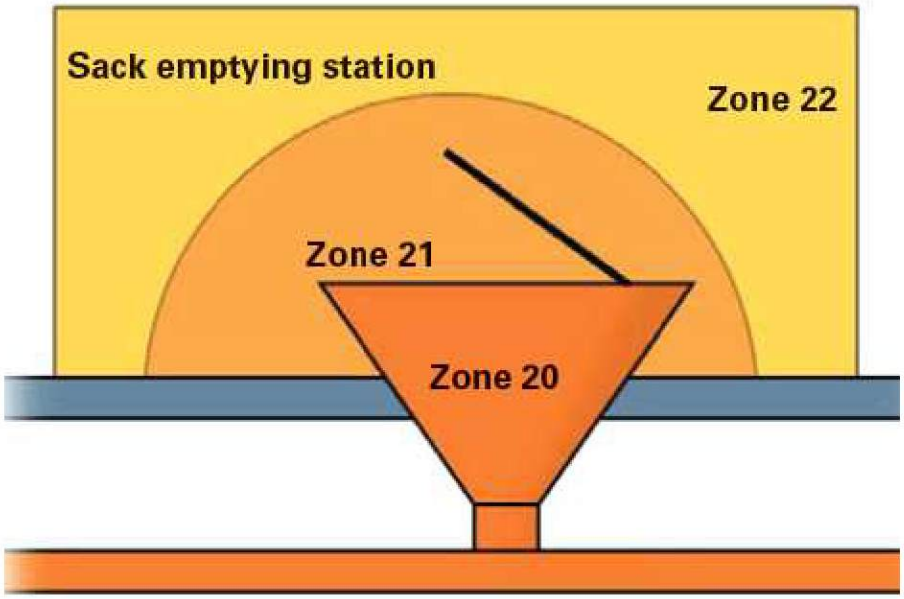

FIGURE B

Zone 20

Area in which an explosive atmosphere consisting of a mixture of air with flammable substances in the form of a cloud of combustible dust is present continuously, or for long periods or frequently.

Zone 21

Area in which an explosive atmosphere consisting of a mixture of air with flammable substances in the form of a cloud of combustible dust is likely to occur occasionally in normal operation.

Zone 22

Area in which an explosive atmosphere consisting of a mixture of air with flammable substances in the form of a cloud of combustible dust is not likely to occur in normal operation, but if it does occur, persists for a short period only.

Note : Above Figures A and B are an example only and must not be used as a model for an actual plant.

www.cabexindia.com

Hazardous Area Equipment

Electrical Equipment	Symbol	Basic Concept of protection
Flameproof	d	Contain the explosion, quench the flame
Increased Safety	e	No arcs, sparks or hot surfaces
Dustproof Enclosure	t	Standard protection for dust, rugged tight enclosure

Electrical Equipment is divided into three groups

Group I

Equipment intended for use in mines susceptible to firedamp (flammable mixture of gases naturally occurring in a mine).

Group II

Equipment intended for use in places with an explosive gas atmosphere other than mines susceptible to firedamp.

Group II equipment is subdivided into three subgroups

Group IIA Atmospheres containing propane, or gases and vapours of equivalent hazard.

Group IIB Atmospheres containing ethylene, or gases and vapours of equivalent hazard.

Group IIC Atmospheres containing acetylene or hydrogen, or gases and vapors of equivalent hazard.

Group III

Equipment intended for use in places with an explosive dust atmosphere.

Group III equipment is subdivided into three subgroups

Group IIIA Atmospheres containing combustible flying.

Group IIIB Atmospheres containing non-conductive dust.

Group IIIC Atmospheres containing conductive dust.

export@cabexindia.com

Electrical Equipment Protection Concept Ex d, Ex e, Ex t .

1) Flameproof Enclosure "d"

Enclosure in which the parts which can ignite an explosive gas atmosphere are placed and which can withstand the pressure developed during an internal explosion of an explosive mixture, and which prevents the transmission of the explosion to the explosive gas atmosphere surrounding the enclosure.

Level of Protection (EPL - Equipment Protection Level)

> Electrical equipment with flameproof enclosure "d" shall be one of the following:
Level of protection "da" (EPL "Ma" or "Ga")
Level of protection "db" (EPL "Mb" or "Gb")
Level of protection "dc" (EPL "Gc").

2) Increased Safety "e"

Type of protection applied to electrical equipment or Ex Components in which additional measures are applied so as to give increased security against the possibility of excessive temperatures and against the occurrence of arcs and sparks.

Level of Protection (EPL - Equipment Protection Level)

> Electrical equipment with increased safety "e" shall be one of the following:
Level of Protection "eb" (EPL "Mb" or "Gb")
Level of Protection "ec" (EPL "Gc").

3) Dust Ignition Protection by Enclosure "t"

Type of protection for explosive dust atmospheres where electrical equipment is provided with an enclosure providing dust ingress protection and a means to limit surface temperatures.

Level of Protection (EPL - Equipment Protection Level)

> Electrical equipment with dust ignition protection by enclosure "t" shall be either:
Level of Protection "ta" (EPL "Da")
Level of Protection "tb" (EPL "Db")
Level of Protection "tc" (EPL "Dc").

CLASSIFICATION OF MARKING OF HAZARDOUS AREA

Flammable Material	Hazardous Area	Equipment Group as per directive 2014/34/EU (ATEX)	Equipment Category as per directive 2014/34/EU (ATEX)			Equipment Group as defined in EN/IEC 60079-0	Equipment Protection Level (EPL) as defined in EN 60079-0		
Methane	NA	I	M1			I	Ma		
		I		M2		I		Mb	
Gas, Mist, Vapour	Zone 0	II	1G			II	Ga		
	Zone 1	II		2G		II		Gb	
	Zone 2	II			3G	II			Gc
Dust	Zone 20	II	1D			III	Da		
	Zone 21	II		2D		III		Db	
	Zone 22	II			3D	III			Dc

SUB DIVISION OF DUST

Group	Dust	Example	SUB DIVISION OF GAS GROUP
IIIA	Combustible Flyings	Fiber	IIA
IIIB	Non-conductive Dust	Milk Powder	IIB
IIIC	Conductive Dust	Graphite Powder	IIC

IP Protection Rating Code

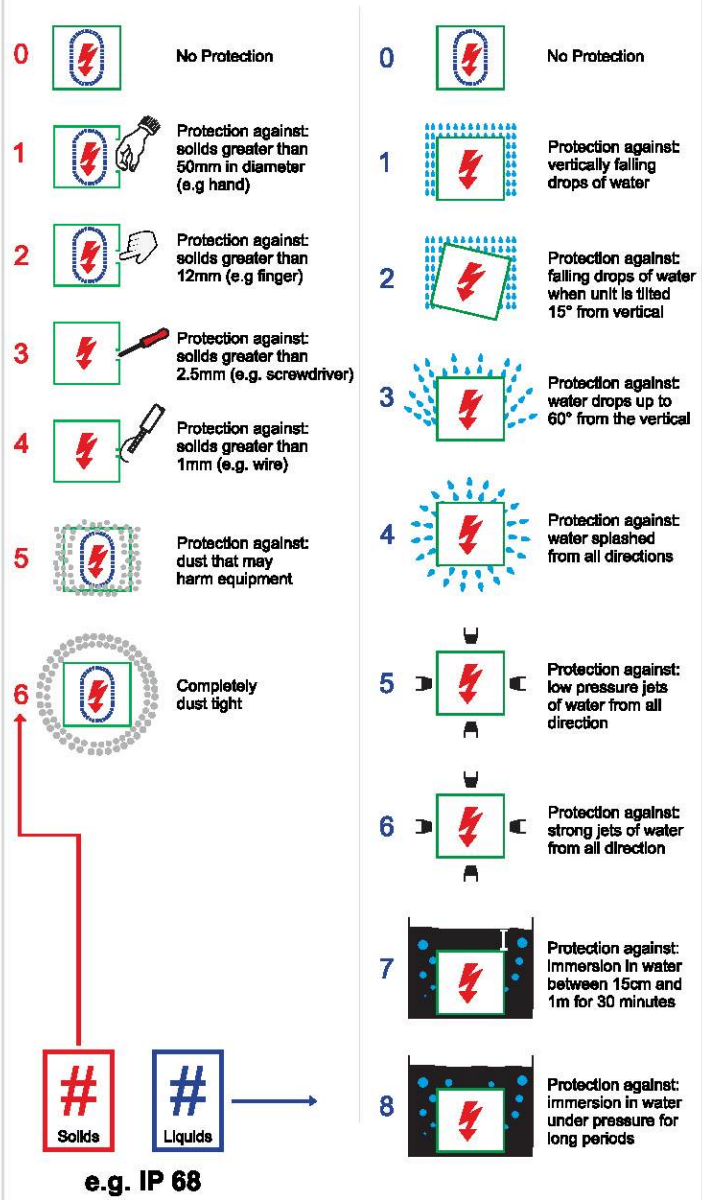

e.g. IP 68

PROTECTION

Type of Protection	Symbol	Code		Zone	Norm
Flameproof Enclosure		Exd	da	0,1,2	EN 60079-1
			db	1,2	
			dc	2	
Incaresed Safety		Exe	eb	1,2	EN 60079-7
			ec	2	
Dustproof Enclosure		Ext	ta	20,21,22	EN 60079-31
			tb	21,22	
			tc	22	

Temperature Classes on Equipment (Applicable to Gases)

T Class	Surface Temperature
T1	450°C
T2	300°C
T3	200°C
T4	135°C
T5	100°C
T6	85°C

E.g. When a site is classified as Zone 2/ II A/ T3 means Hot surfaces becomes dangerous ≥ 200°C & for that reason all Ex equipment shall be selected having a T class T3, T4, T5 or T6.
Remarks : T6 classified sites are most dangerous, T6 Certified Equipment is most Safe!

Use of the Operating Equipment

Marking	Condition
—	Operating equipment can be used without restriction
X	Special Condition of Use
U	Ex component, which is not intended to be used alone & requires additional certification CE-confirmity is declared by the manfacturer if the part is fitted into a complete device

export@cabexindia.com

INDUSTRIAL CABLE GLAND

Industrial Cable Glands	32 to 38
1) BWL Cable Gland	32
2) A2 Cable Gland	33
3) CW Cable Gland	34
4) CX Cable Gland	35
5) E1W Cable Gland	36
6) E1X Cable Gland	37
7) Wiping Cable Gland	38
Ordering Chart for Industrial Cable Gland	39
Thread Conversion & Blanking Plug	40 to 42
1) Adaptor Hex Head	40
2) Reducer Hex Head	41
3) Stopping Plug Hex Head	42
Ordering Chart for Thread Conversion & Blanking Plug	43

export@cabexindia.com

BWL INDUSTRIAL CABLE GLAND

BWL type Industrial Cable Gland for Indoor use with all types of Single Wire Armour (SWA) & Aluminium Wire Armour (AWA) cable, providing Mechanical retention & Electrical continuity via armour wire termination.

Technical Data	
Type	BWL (Industrial)
Design Specification	BS 6121: Part 1:1989, IEC 62444 : 2010 & EN 62444 : 2013
Mechanical Classification**	Retention = Class D, Impact = Level 8
Electrical Classification**	Category B
Enclosure Protection	IK10 to IEC 62262 (20 Joule) Brass
Certificate	WIP
Operating Temperature	-60° C to +200° C
Ingress Protection Rating	IP 2X
Standard Gland Material	Brass (BS EN 12164 / Grade CuZn39Pb3)
Standard Thread	ISO Metric
Cable Type	Single Wire Armour (SWA) & Aluminium Wire Armour (AWA)
Armour Clamping	Detachable Armour Cone & Clamping Ring
Optional Gland Materials	Brass Nickel Plated, Aluminium
Optional Accessories	Adaptor, Reducer, Earth Tag, Lock Nut, Serrated Washer, Shroud
Gland Kits Available	1 Cable Gland, 1 Lock Nut, 1 Earth Tag, 1 PVC Shroud

** Mechanical & Electrical Classification applied as per IEC / EN 62444

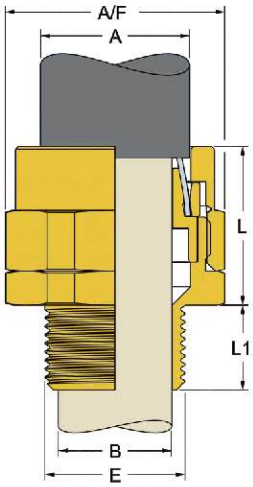

BWL Industrial Cable Gland Selection Table									
	Gland Dimension					Cable Dimension			
Cable Gland Size	Entry Thread E	Minimum Thread Length	Maximum Length	Across Flats	Across Corners	Cable Bedding Diameter	Overall Cable Diameter	Armour Range	
	Standard	L1	L	AF	AC	B	A		
	Metric	Metric	Max.	Max.	Max.	Max.	Max.	Min.	Max.
20S/16	M20	12.00	22.00	24.00	26.40	9.00	14.00	0.80	1.25
20S	M20	12.00	22.00	24.00	26.40	12.00	16.00	0.80	1.25
20	M20	12.00	28.00	30.50	33.50	14.00	21.00	0.80	1.25
25	M25	12.00	32.00	37.50	41.20	20.00	26.40	1.25	1.60
32	M32	12.00	34.00	46.00	50.60	26.20	34.00	1.60	2.00
40	M40	15.00	36.00	55.00	60.50	32.20	40.50	1.60	2.50
50S	M50	15.00	36.00	60.00	66.00	38.00	46.80	2.00	2.50
50	M50	15.00	38.00	70.00	77.00	44.00	53.20	2.00	2.50
63S	M63	15.00	44.00	75.00	82.50	50.00	59.50	2.00	2.50
63	M63	15.00	44.00	80.00	88.00	56.00	66.00	2.00	2.50
75S	M75	15.00	50.00	89.00	98.00	62.20	72.20	2.00	2.50
75	M75	15.00	50.00	99.00	109.00	68.50	78.60	2.50	3.15
90	M90	17.00	56.00	108.00	119.00	80.00	90.50	3.15	4.00
All dimensions are in millimetres (Except * where dimensions are in inches)									

CE IP2X

A2 INDUSTRIAL CABLE GLAND

A2 type Industrial Cable Gland for Indoor & Outdoor use with all types of Unarmoured & may be for Braided cable (where termination facility is available inside the enclosure), providing Mechanical Cable Retention & an Environmental Seal on the cable Outer Sheath.

Technical Data	
Type	A2 (Industrial)
Design Specification	BS 6121: Part 1:1989, IEC 62444 : 2010 & EN 62444 : 2013
Mechanical Classification**	Retention = Class B, Impact = Level 8
Electrical Classification**	Category A
Enclosure Protection	IK10 to IEC 62262 (20 Joule) Brass & Stainless Steel Only
Certificate	WIP
Operating Temperature	-40° C to + 110° C / Optional -60° C to + 180° C
Ingress Protection Rating	IP 66,(IP 67, IP 68*** also available)
Standard Gland Material	Brass (BS EN 12164 / Grade CuZn39Pb3)
Seal Material	Thermoset Elastomer
Standard Thread	ISO Metric / NPT
Cable Type	Unarmoured & Braided
Sealing Technique	Inner Displacement Seal
Sealing Area	Cable Outer Sheath
Optional Thread	BSP, BSPT, PG, Imperial
Optional Gland Material	Brass Nickel Plated, Brass Electroless Nickel Plated, Stainless Steel, Aluminium
Optional Accessories	Adaptor, Reducer, Earth Tag, Lock Nut, Entry Thread Nylon & Fiber Washer, Serrated Washer, Shroud
Gland Kits available	1 Cable Gland, 1 Lock Nut, 1 Nylon IP Washer, 1 PVC Shroud.

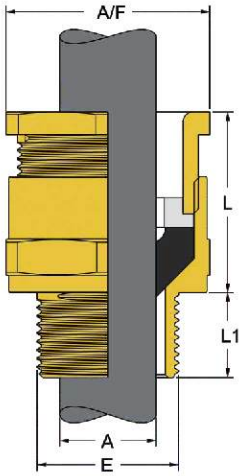

** Mechanical & Electrical Classification applied as per IEC / EN 62444
*** IP 68 : Tested at 30m depth for 7 days (Alternate depth & duration can be provided upon request)

A2 Industrial Cable Gland Selection Table

Cable Gland Size	Gland Dimension							Cable Dimension	
	Entry Thread E			Minimum Thread Length	Maximum Length	Across Flats	Across Corners	Overall Cable Diameter	
	Standard		Option	L1	L	AF	AC	A	
	Metric	NPT*	NPT*	Metric	Max.	Max.	Max.	Min.	Max.
20S/16	M20	1/2"	3/4"	12.00	25.50	24.00	26.40	3.10	8.80
20S	M20	1/2"	3/4"	12.00	25.50	24.00	26.40	6.10	11.80
20	M20	1/2"	3/4"	12.00	27.30	27.00	29.70	8.50	14.00
25S	M25	3/4"	1"	12.00	29.00	31.00	34.10	10.00	16.00
25	M25	3/4"	1"	12.00	35.70	36.00	39.50	14.00	20.00
32	M32	1"	1-1/4"	12.00	35.00	41.00	45.00	17.00	26.40
40	M40	1-1/4"	1-1/2"	15.00	34.80	50.00	50.00	23.50	32.30
50S	M50	1-1/2"	2"	15.00	33.00	55.00	55.00	31.00	38.50
50	M50	2"	2-1/2"	15.00	36.00	60.00	60.00	35.50	44.00
63S	M63	2"	2-1/2"	15.00	34.00	70.00	77.00	41.40	50.00
63	M63	2-1/2"	3"	15.00	36.00	75.00	82.50	47.00	56.20
75S	M75	2-1/2"	3"	15.00	33.50	80.00	88.80	54.00	62.10
75	M75	3"	3-1/2"	15.00	39.00	85.00	93.50	60.00	68.30
90	M90	3-1/2"	4"	20.00	58.50	108.00	118.00	66.60	80.00

All dimensions are in millimetres (Except * where dimensions are in inches)

export@cabexindia.com

CW INDUSTRIAL CABLE GLAND

CW type Industrial Cable Gland for Indoor & Outdoor use with all types of Single Wire Armour (SWA) & Aluminium Wire Armour (AWA) cable, providing Mechanical Cable Retention & an Environmental Seal on the cable Outer Sheath & also providing an Electrical Continuity via armour wire termination.

Technical Data	
Type	CW (Industrial)
Design Specification	BS 6121: Part 1:1989, IEC 62444 : 2010 & EN 62444 : 2013
Mechanical Classification**	Retention = Class D, Impact = Level 8
Electrical Classification**	Category B
Enclosure Protection	IK10 to IEC 62262 (20 Joule) Brass & Stainless Steel Only
Certificate	WIP
Operating Temperature	-40° C to + 110° C / Optional -60° C to + 180° C
Ingress Protection Rating	IP 66
Standard Gland Material	Brass (BS EN 12164 / Grade CuZn39Pb3)
Seal Material	Thermoset Elastomer
Standard Thread	ISO Metric / NPT
Cable Type	Single Wire Armour (SWA) & Aluminium Wire Armour (AWA)
Armour Clamping	Detachable Armour Cone & Clamping Ring
Sealing Technique	Load Retention Outer Seal
Sealing Area	Cable Outer Sheath
Optional Thread	BSP, BSPT, PG, Imperial
Optional Gland Material	Brass Nickel Plated, Brass Electroless Nickel Plated, Stainless Steel, Aluminium
Optional Accessories	Adaptor, Reducer, Earth Tag, Lock Nut, Entry Thread Nylon & Fiber Washer, Serrated Washer, Shroud
Gland Kits available	1 Cable Gland, 1 Lock Nut, 1 Earth Tag, 1 Nylon IP Washer, 1 PVC Shroud

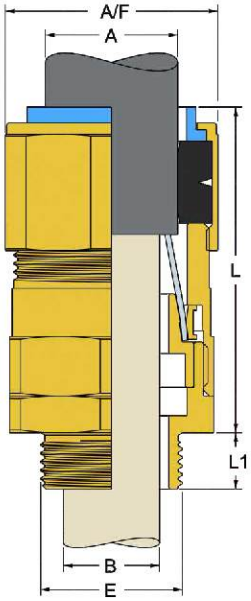

** Mechanical & Electrical Classification applied as per IEC / EN 62444

CW Industrial Cable Gland Selection Table

Cable Gland Size	Gland Dimension							Cable Dimension				
	Entry Thread E			Minimum Thread Length	Maximum Length	Across Flats	Across Corners	Cable Bedding Diameter	Overall Cable Diameter		Armour Range	
	Standard		Option	L1	L	AF	AC	B	A			
	Metric	NPT*	NPT*	Metric	Max.	Max.	Max.	Max.	Min.	Max.	Min.	Max.
20S/16	M20	1/2"	3/4"	12.00	44.00	24.00	26.40	8.80	6.10	13.00	0.80	1.25
20S	M20	1/2"	3/4"	12.00	44.00	24.00	26.40	11.80	9.50	16.00	0.80	1.25
20	M20	1/2"	3/4"	12.00	45.00	30.50	33.50	14.20	13.00	20.90	0.80	1.25
25S	M25	3/4"	1"	12.00	53.50	37.50	41.25	20.00	14.00	22.00	1.25	1.60
25	M25	3/4"	1"	12.00	53.50	37.50	41.25	20.00	18.20	26.20	1.25	1.60
32	M32	1"	1-1/4"	12.00	52.00	46.00	50.60	26.30	23.70	33.90	1.60	2.00
40	M40	1-1/4"	1-1/2"	15.00	56.00	55.00	60.50	32.20	27.90	40.40	1.60	2.00
50S	M50	1-1/2"	2"	15.00	57.00	60.00	66.00	38.20	35.20	46.70	2.00	2.50
50	M50	2"	2-1/2"	15.00	58.50	70.00	77.00	44.00	40.40	53.00	2.00	2.50
63S	M63	2"	2-1/2"	15.00	69.00	75.00	82.50	50.00	45.60	59.00	2.00	2.50
63	M63	2-1/2"	3"	15.00	70.00	80.00	88.00	56.00	54.60	65.50	2.00	2.50
75S	M75	2-1/2"	3"	15.00	80.00	90.00	99.00	62.00	59.00	72.40	2.00	2.50
75	M75	3"	3-1/2"	15.00	80.00	100.00	110.00	68.00	66.70	78.50	2.50	3.15
90	M90	3-1/2"	4"	20.00	93.00	114.00	125.40	80.00	76.20	90.20	3.15	4.00

All dimensions are in millimetres (Except * where dimensions are in inches)

CX INDUSTRIAL CABLE GLAND

CX type Industrial Cable Gland for Indoor & Outdoor use with all types of Wire Braid Armour, Strip Armour, Piliable Wire Armour & Steel Tape Armour cable, providing Mechanical Cable Retention & an Environmental Seal on the cable Outer Sheath and also providing an Electrical continuity via armour wire termination.

Technical Data	
Type	CX (Industrial)
Design Specification	BS 6121: Part 1:1989, IEC 62444 : 2010 & EN 62444 : 2013
Mechanical Classification**	Retention = Class D, Impact = Level 8
Electrical Classification**	Category A
Enclosure Protection	IK 10 to IEC 62262 (20 Joule) Brass & Stainless Steel Only
Certificate	WIP
Operating Temperature	-40° C to + 110° C / Optional -60° C to + 180° C
Ingress Protection Rating	IP 66
Standard Gland Material	Brass (BS EN 12164 / Grade CuZn39Pb3)
Seal Material	Thermoset Elastomer
Standard Thread	ISO Metric / NPT
Cable Type	Wire Braid Armour, Strip Armour, Piliable Wire Armour, Steel Tape Armour
Armour Clamping	Detachable Armour Cone & Clamping Ring
Sealing Technique	Load Retention Outer Seal
Sealing Area	Cable Outer Sheath
Optional Thread	BSP, BSPT, PG, Imperial
Optional Gland Material	Brass Nickel Plated, Brass Electroless Nickel Plated, Stainless Steel, Aluminium
Optional Accessories	Adaptor, Reducer, Earth Tag, Lock Nut, Entry Thread Nylon & Fiber Washer, Serrated Washer, Shroud
Gland Kits available	1 Cable Gland, 1 Lock Nut, 1 Earth Tag, 1 Nylon IP Washer, 1 PVC Shroud

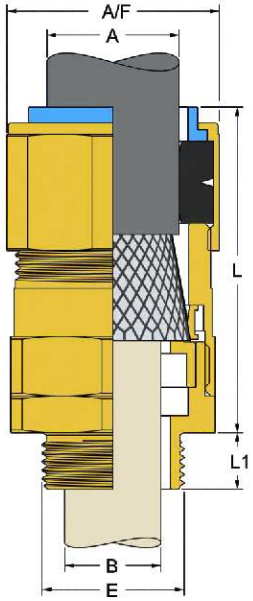

** Mechanical & Electrical Classification applied as per IEC / EN 62444

CX Industrial Cable Gland Selection Table

Cable Gland Size	Gland Dimension							Cable Dimension				
	Entry Thread E			Minimum Thread Length	Maximum Length	Across Flats	Across Corners	Cable Bedding Diameter	Overall Cable Diameter		Armour Range	
	Standard		Option	L1	L	AF	AC	B	A			
	Metric	NPT*	NPT*	Metric	Max.	Max.	Max.	Max.	Min.	Max.	Min.	Max.
20S/16	M20	1/2"	3/4"	12.00	44.00	24.00	26.40	8.80	6.10	13.00	0.30	1.00
20S	M20	1/2"	3/4"	12.00	44.00	24.00	26.40	11.80	9.50	16.00	0.30	1.00
20	M20	1/2"	3/4"	12.00	45.00	30.50	33.50	14.20	13.00	20.90	0.30	1.00
25S	M25	3/4"	1"	12.00	53.50	37.50	41.25	20.00	14.00	22.00	0.40	1.20
25	M25	3/4"	1"	12.00	53.50	37.50	41.25	20.00	18.20	26.20	0.40	1.20
32	M32	1"	1-1/4"	12.00	52.00	46.00	50.60	26.30	23.70	33.90	0.40	1.20
40	M40	1-1/4"	1-1/2"	15.00	56.00	55.00	60.50	32.20	27.90	40.40	0.40	1.60
50S	M50	1-1/2"	2"	15.00	57.00	60.00	66.00	38.20	35.20	46.70	0.40	1.60
50	M50	2"	2-1/2"	15.00	58.50	70.00	77.00	44.00	40.40	53.00	0.50	1.60
63S	M63	2"	2-1/2"	15.00	69.00	75.00	82.50	50.00	45.60	59.00	0.50	1.60
63	M63	2-1/2"	3"	15.00	70.00	80.00	88.00	56.00	54.60	65.50	0.50	1.60
75S	M75	2-1/2"	3"	15.00	80.00	90.00	99.00	62.00	59.00	72.40	0.50	1.60
75	M75	3"	3-1/2"	15.00	80.00	100.00	110.00	68.00	66.70	78.50	0.50	1.60
90	M90	3-1/2"	4"	20.00	93.00	114.00	125.40	80.00	76.20	90.20	0.80	1.60

All dimensions are in millimetres (Except * where dimensions are in inches)

export@cabexindia.com

E1W INDUSTRIAL CABLE GLAND

E1W type Industrial Cable Gland for Indoor & Outdoor use with all types of Single Wire Armour (SWA) & Aluminium Wire Armour (AWA) cable, providing Mechanical Cable Retention & an Environmental Seal on cable Inner Bedding & Outer Sheath and also providing an Electrical Continuity via armour wire termination.

Technical Data	
Type	E1W (Industrial)
Design Specification	BS 6121: Part 1:1989, IEC 62444 : 2010 & EN 62444 : 2013
Mechanical Classification**	Retention = Class D, Impact = Level 8
Electrical Classification**	Category B
Enclosure Protection	IK 10 to IEC 62262 (20 Joule) Brass & Stainless Steel Only
Certificate	WIP
Operating Temperature	-40° C to + 110° C / Optional -60° C to + 180° C
Ingress Protection Rating	IP 66 (IP67 / IP68*** also available)
Standard Gland Material	Brass (BS EN 12164 / Grade CuZn39Pb3)
Seal Material	Thermoset Elastomer
Standard Thread	ISO Metric / NPT
Cable Type	Single Wire Armour (SWA) & Aluminium Wire Armour (AWA)
Armour Clamping	Detachable Armour Cone & Clamping Ring
Sealing Technique	Inner Displacement Seal & Load Retention Outer Seal
Sealing Area	Cable Inner Bedding & Outer Sheath
Optional Thread	BSP, BSPT, PG, Imperial
Optional Gland Material	Brass Nickel Plated, Brass Electroless Nickel Plated, Stainless Steel, Aluminium
Optional Accessories	Adaptor, Reducer, Earth Tag, Lock Nut, Entry Thread Nylon & Fiber Washer, Serrated Washer, Shroud
Gland Kits available	1 Cable Gland, 1 Lock Nut, 1 Earth Tag, 1 Nylon IP Washer, 1 PVC Shroud

** Mechanical & Electrical Classification applied as per IEC / EN 62444
*** IP 68 : Tested at 30m depth for 7 days (Alternate depth & duration can be provided upon request)

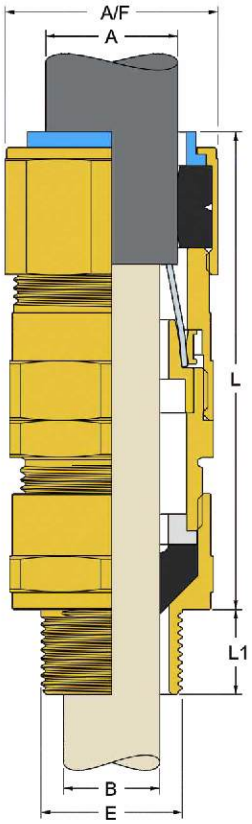

E1W Industrial Cable Gland Selection Table

Cable Gland Size	Gland Dimension							Cable Dimension					
	Entry Thread E			Minimum Thread Length	Maximum Length	Across Flats	Across Corners	Cable Bedding Diameter		Overall Cable Diameter		Armour Range	
	Standard		Option	L1	L	AF	AC	B		A			
	Metric	NPT*	NPT*	Metric	Max.	Max.	Max.	Min.	Max.	Min.	Max.	Min.	Max.
20S/16	M20	1/2"	3/4"	12.00	65.00	24.00	26.40	3.10	8.80	6.10	13.00	0.80	1.25
20S	M20	1/2"	3/4"	12.00	65.00	24.00	26.40	6.10	11.80	9.50	16.00	0.80	1.25
20	M20	1/2"	3/4"	12.00	69.00	30.50	33.50	8.50	14.00	13.00	20.90	0.80	1.25
25S	M25	3/4"	1"	12.00	84.00	37.50	41.25	10.00	16.00	14.00	22.00	1.25	1.60
25	M25	3/4"	1"	12.00	84.00	37.50	41.25	14.00	20.00	18.20	26.20	1.25	1.60
32	M32	1"	1-1/4"	12.00	80.00	46.00	50.60	17.00	26.40	23.70	33.90	1.60	2.00
40	M40	1-1/4"	1-1/2"	15.00	85.00	55.00	60.50	23.50	32.30	27.90	40.40	1.60	2.00
50S	M50	1-1/2"	2"	15.00	80.00	60.00	66.00	31.00	38.50	35.20	46.70	2.00	2.50
50	M50	2"	2-1/2"	15.00	88.00	70.00	77.00	35.50	44.00	40.40	53.00	2.00	2.50
63S	M63	2"	2-1/2"	15.00	94.00	75.00	82.50	41.40	50.00	45.60	59.00	2.00	2.50
63	M63	2-1/2"	3"	15.00	96.00	80.00	88.00	47.00	56.20	54.60	65.50	2.00	2.50
75S	M75	2-1/2"	3"	15.00	105.00	90.00	99.00	54.00	62.10	59.00	72.40	2.00	2.50
75	M75	3"	3-1/2"	15.00	108.00	100.00	110.00	60.00	68.30	66.70	78.50	2.50	3.15
90	M90	3-1/2"	4"	20.00	138.00	114.00	125.40	66.60	80.00	76.20	90.20	3.15	4.00

All dimensions are in millimetres (Except * where dimensions are in inches)

E1X INDUSTRIAL CABLE GLAND

E1X type Industrial Cable Gland for Indoor & Outdoor use with all types of Wire Braid Armour, Strip Armour, Pilliable Wire Armour & Steel Tape Armour cable, providing Mechanical Cable Retention & an Environmental Seal on cable Inner Bedding & Outer Sheath & also providing an Electrical Continuity via armour wire termination.

Technical Data	
Type	E1X (Industrial)
Design Specification	BS 6121: Part 1:1989, IEC 62444 : 2010 & EN 62444 : 2013
Mechanical Classification**	Retention = Class D, Impact = Level 8
Electrical Classification**	Category A
Enclosure Protection	IK 10 to IEC 62262 (20 Joule) Brass & Stainless Steel Only
Certificate	WIP
Operating Temperature	-40° C to + 110° C / Optional -60° C to + 180° C
Ingress Protection Rating	IP 66 (IP67 / IP68*** also available)
Standard Gland Material	Brass (BS EN 12164 / Grade CuZn39Pb3)
Seal Material	Thermoset Elastomer
Standard Thread	ISO Metric / NPT
Cable Type	Wire Braid Armour, Strip Armour, Pilliable Wire Armour, Steel Tape Armour
Armour Clamping	Detachable Armour Cone & Clamping Ring
Sealing Technique	Inner Displacement Seal & Load Retention Outer Seal
Sealing Area	Cable Inner Bedding & Outer Sheath
Optional Thread	BSP, BSPT, PG, Imperial
Optional Gland Material	Brass Nickel Plated, Brass Electroless Nickel Plated, Stainless Steel, Aluminium
Optional Accessories	Adaptor, Reducer, Earth Tag, Lock Nut, Entry Thread Nylon & Fiber Washer, Serrated Washer, Shroud
Gland Kits available	1 Cable Gland, 1 Lock Nut, 1 Earth Tag, 1 Nylon IP Washer, 1 PVC Shroud

** Mechanical & Electrical Classification applied as per IEC / EN 62444
*** IP 68 : Tested at 30m depth for 7 days (Alternate depth & duration can be provided upon request)

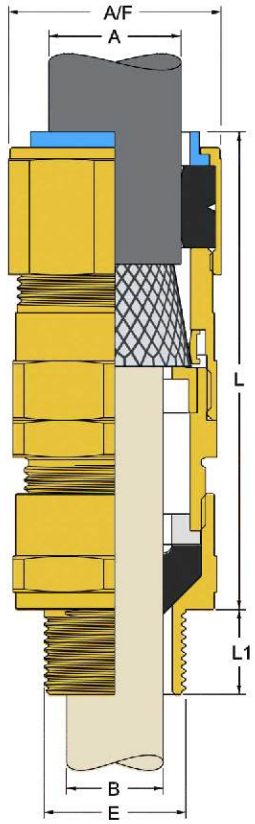

E1X Industrial Cable Gland Selection Table

Cable Gland Size	Gland Dimension							Cable Dimension					
	Entry Thread E			Minimum Thread Length	Maximum Length	Across Flats	Across Corners	Cable Bedding Diameter		Overall Cable Diameter		Armour Range	
	Standard		Option	L1	L	AF	AC	B		A			
	Metric	NPT*	NPT*	Metric	Max.	Max.	Max.	Min.	Max.	Min.	Max.	Min.	Max.
20S/16	M20	1/2"	3/4"	12.00	65.00	24.00	26.40	3.10	8.80	6.10	13.00	0.30	1.00
20S	M20	1/2"	3/4"	12.00	65.00	24.00	26.40	6.10	11.80	9.50	16.00	0.30	1.00
20	M20	1/2"	3/4"	12.00	69.00	30.50	33.50	8.50	14.00	13.00	20.90	0.30	1.00
25S	M25	3/4"	1"	12.00	84.00	37.50	41.25	10.00	16.00	14.00	22.00	0.40	1.20
25	M25	3/4"	1"	12.00	84.00	37.50	41.25	14.00	20.00	18.20	26.20	0.40	1.20
32	M32	1"	1-1/4"	12.00	80.00	46.00	50.60	17.00	26.40	23.70	33.90	0.40	1.20
40	M40	1-1/4"	1-1/2"	15.00	85.00	55.00	60.50	23.50	32.30	27.90	40.40	0.40	1.60
50S	M50	1-1/2"	2"	15.00	80.00	60.00	66.00	31.00	38.50	35.20	46.70	0.40	1.60
50	M50	2"	2-1/2"	15.00	88.00	70.00	77.00	35.50	44.00	40.40	53.00	0.50	1.60
63S	M63	2"	2-1/2"	15.00	94.00	75.00	82.50	41.40	50.00	45.60	59.00	0.50	1.60
63	M63	2-1/2"	3"	15.00	96.00	80.00	88.00	47.00	56.20	54.60	65.50	0.50	1.60
75S	M75	2-1/2"	3"	15.00	105.00	90.00	99.00	54.00	62.10	59.00	72.40	0.50	1.60
75	M75	3"	3-1/2"	15.00	108.00	100.00	110.00	60.00	68.30	66.70	78.50	0.50	1.60
90	M90	3-1/2"	4"	20.00	138.00	114.00	125.40	66.60	80.00	76.20	90.20	0.80	1.60

All dimensions are in millimetres (Except * where dimensions are in inches)

export@cabexindia.com

WIPPING GLAND & FITTINGS

Used to facilitate the termination of high voltage power cables. Used in dry indoor and outdoor conditions. Cabex can supply standard stock or customised brass wiping glands to client specification.

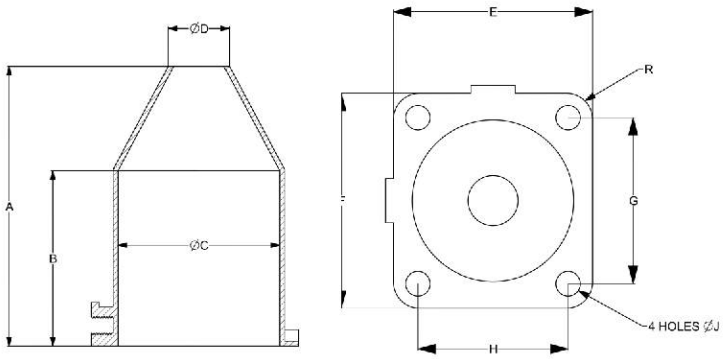

GLAND SIZE X & Y

Wipping Gland	
Material	Brass
Finish	Natural

Wipping Gland Selection Table

Gland Size	Dia over metal sheath of cable	Dimension in (mm)									
	(mm)	A	B	ØC	ØD	E	F	G	H	ØJ	R
X	12 to 51	137	90	60	19	90	90	66	66	12	12
Y	25 to 78	155	95	89	32	114	123	95	86	14	14
Z	25 to 94	195	140	108	32	190	-	-	-	14	-

FITTINGS FOR WIPPING GLAND

Insulating Plate	
Material	Brass
Finish	Natural

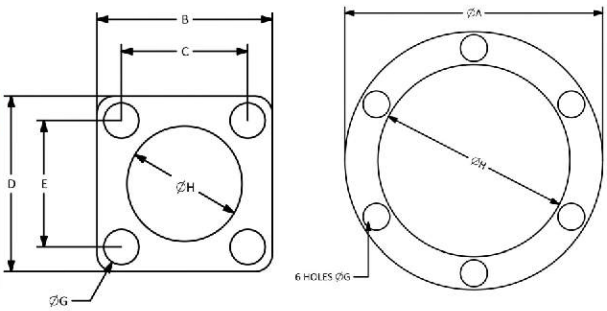

Insulating Plate Selection Table

Insulating Plate	Dimension in (mm)						
	ØA	B	C	D	E	ØG	ØH
PX	-	90	66	19	90	14	60
PY	-	114	86	32	114	16	90
PZ	190	-	-	32	190	16	108

Insulating Bush	
Material	Neoprene

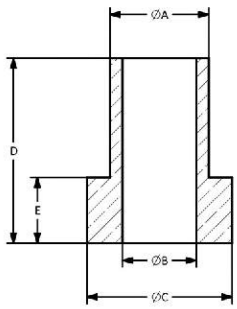

Armour Clamp	
Material	M.S. Strip
Finish	Electro Zinc Plated

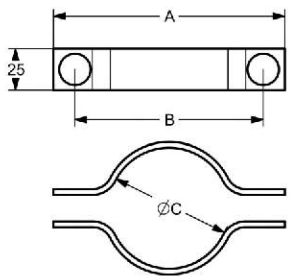

Insulating Bush Selection Table

Insulating Bush	Dimension in (mm)				
	ØA	ØB	ØC	D	E
A	15	11.20	22	28	10
B	18	14.00	28	28	10
C	18	14.00	28	28	10

Armour Clamp Selection Table

Gland Size	Dimension in (mm)		
	A	B	ØC
X	140	108	73
Y	175	145	103
Z	190	160	123

Selection Of Gland With Fittings

Gland Size	Insulating Plate	Insulating Bush
X	PX	A
Y	PY	B
Z	PZ	C

ORDERING CHART FOR INDUSTRIAL CABLE GLANDS

CABEX®

e.g. CECI20A2-2BR-M02

STANDARD CODE (Table A)	SIZE (Table B)	TYPE (Table C)		SUPPLY (Table D)	MATERIAL (Table E)		ENTRY THREAD TYPE (Table F)	ENTRY THREAD SIZE (Table G)
CECI	20	A2	-	2	BR	-	M	02
Table A	Table B	Table C		Table D	Table E		Table F	Table G

Standard Code		Cable Gland Size	Type	Supply		Material		Entry Thread Type		Entry Thread Size		
CECI	CABEX INDUSTRIAL SERIES	20S/16	BWL	1	GLAND	BR	BRASS	M	METRIC	00	-	3/8"
		20S	A2	2	PACK*	BN	BRASS NICKEL PLATED	N	NPT	01	16	1/2"
		20	CW			BE	BRASS ELECTROLESS NICKEL PLATED			02	20	3/4"
		25S	CX			SS	STAINLESS STEEL			03	25	1"
		25	E1W			AL	ALUMINIUM			04	32	1-1/4"
		32	E1X							05	40	1-1/2"
		40								06	50	2"
		50S								07	63	2-1/2"
		50								08	75	3"
		63S								09	80	3-1/2"
		63								10	85	4"
		75S								11	90	-
		75								12	100	-
		90										

*Standard Kit - 1 Gland , 1 Lock Nut , 1 Earth Tag, 1 Nylon IP Washer , 1 Shroud
Optional Kit - Available on request

export@cabexindia.com

ADAPTOR- HEX HEAD

Application: Change smaller thread to larger thread when there is a disconnect between the type or size of the Cable Gland thread and the cable entry hole in the equipment.

Technical Data	
Type	Adaptor-Hex Head (Industrial)
Design Specification	BS 6121: Part 1:1989, IEC 62444 : 2010 & EN 62444 : 2013
Certificate	WIP
Enclosure Protection	IK10 to IEC 62262 (20 Joule) Brass & Stainless Steel Only
Standard Size	M 16 to M 100 (3/8" NPT to 4" NPT)
Optional Size	Other sizes avilable on request
Operating Temprature	-60° C to + 200° C***
Ingress Protection Rating	IP 66 or IP 67 / IP 68 when fitted with 'O' Ring or Entry Thread sealing Washer
Standard Material	Brass (BS EN 12164 / Grade CuZn39Pb3)
Optional Material	Stainless Steel, Aluminium
Finish	Brass Nickel Plated, Zinc Plated & Other upon request
Standard Thread	ISO Metric / NPT

***When fitted without any IP washer or O Ring

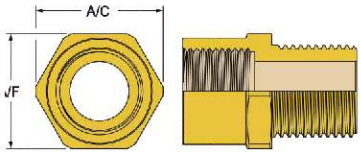

Adaptor Selection Table 'A'

METRIC			NPT		
Thread Size	Across Flat A/F	Across Corner A/C	Thread Size*	Across Flat A/F	Across Corner A/C
M16	19.00	21.00	3/8"	20.00	22.00
M20	23.00	25.40	1/2"	25.00	27.50
M25	28.00	31.00	3/4"	30.00	33.00
M32	36.00	39.50	1"	37.50	41.25
M40	44.00	48.50	1-1/4"	47.00	51.70
M50	55.00	60.50	1-1/2"	55.00	60.50
M63	68.00	74.50	2"	65.00	71.50
M75	80.00	88.00	2-1/2"	80.00	88.00
M80	86.00	90.00	3"	97.00	106.70
M85	92.00	101.00	3-1/2"	108.00	118.80
M90	97.00	106.50	4"	120.00	132.00
M100	108.00	118.00	-	-	-

All dimensions are in millimetres (Except * where dimensions are in inches)

Adaptor Sizing Table 'B'

FEMALE THREAD

MALE THREAD

Metric Thread

Size	M16	M20	M25	M32	M40	M50	M63	M75	M80	M85	M90	M100
M16	■	■	■									
M20		■	■	■								
M25			■	■	■							
M32				■	■	■						
M40					■	■	■					
M50						■	■	■				
M63							■	■	■	■	■	
M75								■	■	■	■	■
M80											■	■
M85											■	■
M90											■	■
M100												■

NPT Thread

Size	3/8"	1/2"	3/4"	1"	1-1/4"	1-1/2"	2"	2-1/2"	3"	3-1/2"	4"
M16	■	■	■								
M20	■	■	■	■							
M25		■	■	■							
M32			■	■	■						
M40				■	■	■					
M50					■	■	■				
M63						■	■	■			
M75							■	■	■		
M80								■	■		
M85								■	■	■	
M90								■	■	■	
M100									■	■	■

Metric Thread

Size	M16	M20	M25	M32	M40	M50	M63	M75	M80	M85	M90	M100
3/8"	■	■	■									
1/2"	■	■	■									
3/4"		■	■	■								
1"			■	■	■							
1-1/4"				■	■	■						
1-1/2"					■	■	■					
2"						■	■	■				
2-1/2"							■	■	■			
3"								■	■	■	■	■
3-1/2"											■	■
4"												■

NPT Thread

Size	3/8"	1/2"	3/4"	1"	1-1/4"	1-1/2"	2"	2-1/2"	3"	3-1/2"	4"
3/8"	■	■	■								
1/2"		■	■	■							
3/4"			■	■	■						
1"				■	■	■					
1-1/4"					■	■	■				
1-1/2"						■	■	■			
2"							■	■	■		
2-1/2"								■	■	■	
3"									■	■	■
3-1/2"										■	■
4"											■

■ **Box indicating standard sizes.** ■ **Other sizes available on request.**

REDUCER- HEX HEAD

Application: Change larger thread to smaller thread when there is a disconnect between the type or size of the Cable Gland thread and the cable entry hole in the equipment.

Technical Data

Type	Reducer- Hex Head (Industrial)
Design Specification	BS 6121: Part 1:1989, IEC 62444 : 2010 & EN 62444 : 2013
Certificate	WIP
Enclosure Protection	IK10 to IEC 62262 (20 Joule) Brass & Stainless Steel Only
Standard Size	M 12 to M 100 (3/8" NPT to 4" NPT)
Optional Size	Other sizes avilable on request
Operating Temprature	-60° C to + 200° C***
Ingress Protection Rating	IP 66 or IP 67 / IP 68 when fitted with 'O' Ring or Entry Thread sealing Washer
Standard Material	Brass (BS EN 12164 / Grade CuZn39Pb3)
Optional Material	Stainless Steel, Aluminium
Finish	Brass Nickel Plated, Zinc Plated & Other upon request
Standard Thread	ISO Metric / NPT

***When fitted without any IP washer or O Ring

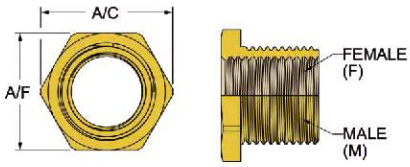

Reducer Selection Table 'A'

METRIC			NPT		
Thread Size	Across Flat A/F	Across Corner A/C	Thread Size*	Across Flat A/F	Across Corner A/C
M16	19.00	21.00	3/8"	20.00	22.00
M20	23.00	25.40	1/2"	25.00	27.50
M25	28.00	31.00	3/4"	30.00	33.00
M32	36.00	39.50	1"	37.50	41.25
M40	44.00	48.50	1-1/4"	47.00	51.70
M50	55.00	60.50	1-1/2"	55.00	60.50
M63	68.00	74.50	2"	65.00	71.50
M75	80.00	88.00	2-1/2"	80.00	88.00
M80	86.00	90.00	3"	97.00	106.70
M85	92.00	101.00	3-1/2"	108.00	118.80
M90	97.00	106.50	4"	120.00	132.00
M100	108.00	118.00	-	-	-

All dimensions are in millimetres (Except * where dimensions are in inches)

Reducer Sizing Table 'B'

FEMALE THREAD

Metric Thread

MALE THREAD	Size	M12	M16	M20	M25	M32	M40	M50	M63	M75	M80	M85	M90	M100
Metric Thread	M16	■												
	M20	■	■											
	M25	■	■	■										
	M32	■	■	■	■									
	M40	■	■	■	■	■								
	M50	■	■	■	■	■	■							
	M63	■	■	■	■	■	■	■						
	M75	■	■	■	■	■	■	■	■					
	M80	■	■	■	■	■	■	■	■	■				
	M85	■	■	■	■	■	■	■	■	■	■			
	M90	■	■	■	■	■	■	■	■	■	■	■		
	M100	■	■	■	■	■	■	■	■	■	■	■	■	
NPT Thread	3/8"	■												
	1/2"	■	■											
	3/4"	■	■	■										
	1"	■	■	■	■									
	1-1/4"	■	■	■	■	■								
	1-1/2"	■	■	■	■	■	■							
	2"	■	■	■	■	■	■	■						
	2-1/2"	■	■	■	■	■	■	■	■					
	3"	■	■	■	■	■	■	■	■	■	■	■		
	3-1/2"	■	■	■	■	■	■	■	■	■	■	■	■	
	4"	■	■	■	■	■	■	■	■	■	■	■	■	■

NPT Thread

MALE THREAD	Size	3/8"	1/2"	3/4"	1"	1-1/4"	1-1/2"	2"	2-1/2"	3"	3-1/2"
Metric Thread	M16										
	M20	■									
	M25	■	■								
	M32	■	■	■							
	M40	■	■	■	■						
	M50	■	■	■	■	■					
	M63	■	■	■	■	■	■				
	M75	■	■	■	■	■	■	■			
	M80	■	■	■	■	■	■	■	■		
	M85	■	■	■	■	■	■	■	■		
	M90	■	■	■	■	■	■	■	■		
	M100	■	■	■	■	■	■	■	■	■	
NPT Thread	3/8"										
	1/2"	■									
	3/4"	■	■								
	1"	■	■	■							
	1-1/4"	■	■	■	■						
	1-1/2"	■	■	■	■	■					
	2"	■	■	■	■	■	■				
	2-1/2"	■	■	■	■	■	■	■			
	3"	■	■	■	■	■	■	■	■		
	3-1/2"	■	■	■	■	■	■	■	■	■	
	4"	■	■	■	■	■	■	■	■	■	■

■ **Box indicating standard sizes.**

export@cabexindia.com

STOPPING PLUG -HEX HEAD

Application: To close unused Cable Gland entries temporary or permanently & maintain the intergrity of the equipments.

Technical Data	
Type	Stopping Plug -Hex Head (Industrial)
Design Specification	BS 6121: Part 1:1989, IEC 62444 : 2010 & EN 62444 : 2013
Certificate	WIP
Enclosure Protection	IK10 to IEC 62262 (20 Joule) Brass & Stainless Steel Only
Standard Size	M12 to M100 (3/8" NPT to 4" NPT)
Optional Size	Other sizes avilable on request
Operating Temprature	-60° C to + 200° C***
Ingress Protection Rating	IP 66 or IP 67 / IP 68 when fitted with 'O' Ring or Entry Thread sealing Washer
Standard Material	Brass (BS EN 12164 / Grade CuZn39Pb3)
Optional Material	Stainless Steel, Aluminium
Finish	Brass Nickel Plated, Zinc Plated & Other upon request.
Standard Thread	ISO Metric / NPT

***When fitted without any IP washer or O Ring

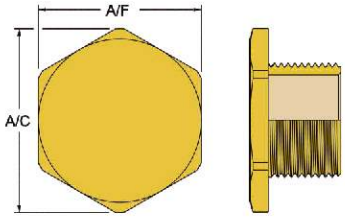

Stopping Plug Selection Table 'A'

METRIC			NPT		
Thread Size	Across Flat A/F	Across Corner A/C	Thread Size*	Across Flat A/F	Across Corner A/C
M12	15.00	16.50	3/8"	20.00	22.00
M16	19.00	21.00	1/2"	25.00	27.50
M20	23.00	25.40	3/4"	30.00	33.00
M25	28.00	31.00	1"	37.50	41.25
M32	36.00	39.50	1-1/4"	47.00	51.70
M40	44.00	48.50	1-1/2"	55.00	60.50
M50	55.00	60.50	2"	65.00	71.50
M63	68.00	74.50	2-1/2"	80.00	88.00
M75	80.00	88.00	3"	97.00	106.70
M80	86.00	90.00	3-1/2"	108.00	118.80
M85	92.00	101.00	4"	120.00	132.00
M90	97.00	106.50	-	-	-
M100	108.00	118.00	-	-	-

All dimensions are in millimetres (Except * where dimensions are in inches)

ORDERING CHART FOR THREAD CONVERSION & BLANKING PLUG

CABEX®

e.g. CECIAD-BR-M02N02-OR (For Adaptor Hex Head) / e.g. CECISPHH-BR-M02-OR (For Stopping Plug Hex Head)

STANDARD CODE (Table A)	PRODUCT TYPE (Table B)		MATERIAL (Table C)		MALE*THREAD TYPE & SIZE (Table D & E)	FEMALE*THREAD TYPE & SIZE (Table D & E)		OPTION (Table F)
CECI	AD	–	BR	–	M 02	N 02	–	OR
CECI	SPHH	–	BR	–	M 02	-	–	OR
Table A	Table B		Table C		Table D	Table E		Table F

Standard Code	
CECI	CABEX INDUSTRIAL SERIES

Product Code	
AD	ADAPTOR HEX HEAD
RD	REDUCER HEX HEAD
SPHH	STOPPING PLUG HEX HEAD

Material	
BR	BRASS
BN	BRASS NICKEL PLATED
BE	BRASS ELECTROLESS NICKEL PLATED
SS	STAINLESS STEEL
AL	ALUMINIUM

Entry Thread Type	
M	METRIC
N	NPT

Entry Thread Size		
	METRIC	NPT
00	12	3/8"
01	16	1/2"
02	20	3/4"
03	25	1"
04	32	1-1/4"
05	40	1-1/2"
06	50	2"
07	63	2-1/2"
08	75	3"
09	80	3-1/2"
10	85	4"
11	90	-
12	100	-

Option	
OR	O-RING
NW	NYLON WASHER
FW	FIBER WASHER

* Male & Female Thread Type & Size applicable to Adaptor & Reducer Only.

export@cabexindia.com

HAZARDOUS AREA CABLE GLAND

Hazardous Area Cable Glands	46 to 48
1) A2F Cable Gland	46
2) CFU Cable Gland	47
3) E1FU Cable Gland	48
Hazardous Area High Temperature Cable Gland	50 to 52
1) A2F- HT Cable Gland	50
2) CFU- HT Cable Gland	51
3) E1FU - HT Cable Gland	52
Ordering Chart for Hazardous Area Cable Glands	53

export@cabexindia.com

Ex A2F CABLE GLAND

Ex A2F type Hazardous Area Cable Gland Certified in Flamproof (Type 'db'), Increased Safety (Type 'eb') & Dust Ignition protection (Type 'ta') for Indoor & Outdoor use in Zone 1, 2, 20, 21 & 22 hazardous areas with Unarmoured & Braided Cable providing a combined Flameproof Seal & an Environmental Seal on the cable Outer Sheath.

Technical Data	
Type	Ex A2F
Design Specification	BS 6121: Part 1:1989, IEC 62444 : 2010 & EN 62444 : 2013
Mechanical Classification**	Retention = Class B, Impact = Level 8
Electrical Classification**	Category A
Enclosure Protection	IK10 to IEC 62262 (20 Joule) Brass & Stainless Steel Only
Operating Temperature	-40° C to + 85° C
Ingress Protection Rating	IP 66 / IP 68***
Standard Gland Material	Brass (BS EN 12164 / Grade CuZn39Pb3)
Seal Material	Thermoset Elastomer
Standard Thread	ISO Metric / NPT
Cable Type	Unarmoured & Braided
Sealing Technique	Inner Displacement Seal
Sealing Area	Cable Outer Sheath
Optional Gland Material	Brass Nickel Plated, Brass Electroless Nickel Plated, Stainless Steel (SS316 & SS316L)
Optional Accessories	Adaptor, Reducer, Earth Tag, Lock Nut, Entry Thread Nylon & Fiber Washer, Serrated Washer, Shroud
Global Certification	
Compliance Standards	EN/IEC 60079-0, 1, 7, 31
ATEX Certificate	DNV 22ATEX73142X
Code of Protection	Ex || 2G 1D CE 2460, IP66/IP68
IECEx Certificate	IECEx DNV 22.0002X
Code of Protection	Ex db ||C Gb, Ex eb ||C Gb, Ex ta |||C Da
EAC Certificate	Applied for Certificate
DNV GL Certificate	Applied for Certificate
ABS Certificate	Applied for Certificate
PESO Certificate	Applied for Certificate

** Mechanical & Electrical Classification applied as per IEC / EN 62444
*** IP 68 : Tested at 30m depth for 7 days (Alternate depth & duration can be provided upon request)

Ex db | **Ex eb** | **Ex ta**

For Group II & III

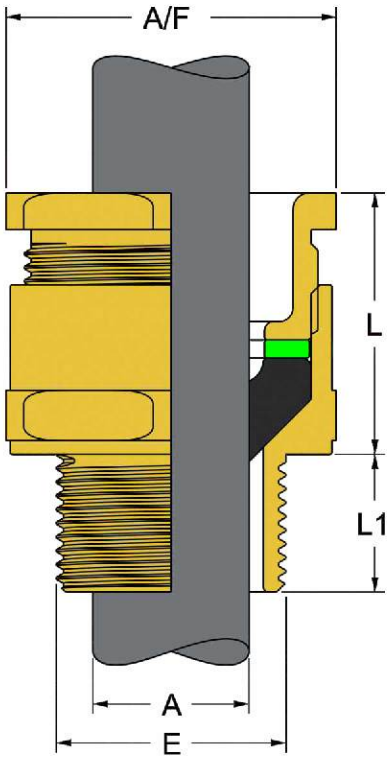

Ex A2F Cable Gland Selection Table

Cable Gland Size	Gland Dimensions								Cable Dimensions	
	Entry Thread E			Minimum Thread Length		Maximum Length	Across Flats	Across Corners	Overall Cable Diameter	
	Standard		Option	L1		L	AF	AC	A	
	Metric	NPT*	NPT*	Metric	NPT	Max.	Max.	Max.	Min.	Max.
20S/16	M20	1/2"	3/4"	15.00	20.00	25.00	24.00	26.25	3.10	8.70
20S	M20	1/2"	3/4"	15.00	20.00	25.00	25.00	27.50	7.00	11.70
20	M20	1/2"	3/4"	15.00	20.00	26.00	27.00	29.75	10.00	14.00
25S	M25	3/4"	1"	15.00	20.50	29.00	31.00	34.00	11.00	16.00
25	M25	3/4"	1"	15.00	20.50	32.00	36.00	39.50	14.50	20.00
32	M32	1"	1-1/4"	15.00	25.50	33.00	44.00	48.50	18.50	26.40
40	M40	1-1/4"	1-1/2"	15.00	26.00	35.00	52.00	57.25	25.00	32.30
50S	M50	1-1/2"	2"	15.00	26.50	33.00	58.00	63.75	31.50	38.50
50	M50	2"	2-1/2"	15.00	27.00	36.50	63.00	69.25	36.50	44.00
63S	M63	2"	2-1/2"	15.00	27.00	34.00	72.00	79.00	42.50	50.00
63	M63	2-1/2"	3"	15.00	40.00	38.00	80.00	88.00	48.50	56.20
75S	M75	2-1/2"	3"	15.00	40.00	36.50	83.00	91.25	55.00	62.00
75	M75	3"	3-1/2"	15.00	42.00	42.50	90.00	99.00	61.50	68.00
90	M90	3-1/2"	4"	20.00	43.00	53.50	106.00	116.50	65.00	80.00

All dimensions are in millimetres (Except * where dimensions are in inches)

ATEX | IECEx | CE | IP66 | IP68

Ex CFU CABLE GLAND

Ex CFU type Hazardous Area Cable Gland Certified in Increased Safety (Type 'eb') & Dust Ignition Protection (Type 'ta') for use in Zone1, 2, 20, 21 & 22 hazardous areas with all types of Armour cable providing an Environmental Seal on the cable Outer Sheath, also providing Mechanical Cable Retention & an Electrical Continuity via armour wire termination.

Technical Data	
Type	Ex CFU
Design Specification	BS 6121: Part 1:1989, IEC 62444 : 2010 & EN 62444 : 2013
Mechanical Classification**	Retention = Class D, Impact = Level 8
Electrical Classification**	Category B
Enclosure Protection	IK10 to IEC 62262 (20 Joule) Brass & Stainless Steel Only
Operating Temperature	-40° C to + 85° C
Ingress Protection Rating	IP 66/IP 68***
Standard Gland Material	Brass (BS EN 12164 / Grade CuZn39Pb3)
Seal Material	Thermoset Elastomer
Standard Thread	ISO Metric / NPT
Cable Type	Wire Braid Armour, Strip Armour, Piliable Wire Armour, Steel Tape Armour, Single Wire Armour, Aluminium Wire Armour
Armour Clamping	Detachable Armour Cone & Universal Armour Clamping Ring
Sealing Technique	Load Retention Outer Seal
Sealing Area	Cabel Outer Sheath
Optional Gland Material	Brass Nickel Plated, Brass Electroless Nickel Plated, Stainless Steel (SS316 & SS316L)
Optional Accessories	Adaptor, Reducer, Earth Tag, Lock Nut, Entry Thread Nylon & Fiber Washer, Serrated Washer, Shroud
Global Certification	
Compliance Standards	EN/IEC 60079-0, 1, 7, 31
ATEX Certificate	DNV 22ATEX73142X
Code of Protection	Ex I M2 Ex II 2G 1D CE 2460, IP66/IP68
IECEx Certificate	IECEx DNV 22.0002X
Code of Protection	Ex eb I Mb, Ex eb IIC Gb, Ex ta IIIC Da
EAC Certificate	Applied for Certificate
DNV GL Certificate	Applied for Certificate
ABS Certificate	Applied for Certificate
PESO Certificate	Applied for Certificate

** Mechanical & Electrical Classification applied as per IEC / EN 62444
*** IP 68 : Tested at 30m depth for 7 days (Alternate depth & duration can be provided upon request)

Ex eb **Ex ta**

For Group I, II & III

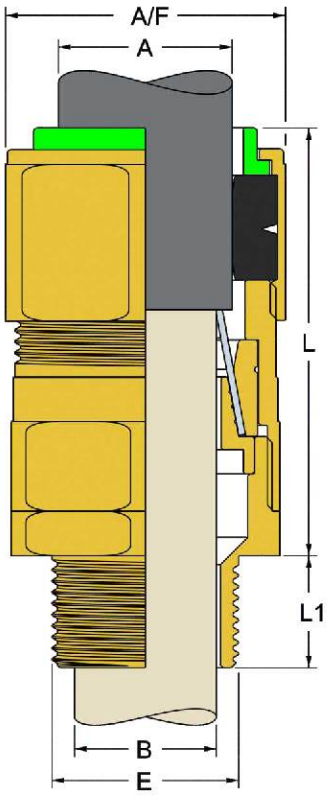

Ex CFU Cable Gland Selection Table

Cable Gland Size	Gland Dimensions								Cable Dimensions						
	Entry Thread E			Minimum Thread Length		Maximum Length	Across Flats	Across Corners	Cable Bedding Diameter	Overall Cable Diameter		Armour Range			
	Standard		Option	L1		L	AF	AC	B	A		Direction 1		Direction 2	
	Metric	NPT*	NPT*	Metric	NPT	Max.	Max.	Max.	Max.	Min.	Max.	Min.	Max.	Min.	Max.
20S/16	M20	1/2"	3/4"	15.00	20.00	52.25	24.00	26.50	8.70	6.10	11.60	0.80	1.25	0.10	1.00
20S	M20	1/2"	3/4"	15.00	20.00	52.25	24.00	26.50	11.70	9.50	16.00	0.80	1.25	0.10	1.00
20	M20	1/2"	3/4"	15.00	20.00	52.50	31.00	34.00	14.00	12.50	21.20	0.80	1.25	0.10	1.00
25S	M25	3/4"	1"	15.00	20.50	64.00	37.50	41.25	16.00	14.10	22.00	1.25	1.60	0.10	1.00
25	M25	3/4"	1"	15.00	20.50	64.00	37.50	41.25	20.00	18.50	26.30	1.25	1.60	0.10	1.00
32	M32	1"	1-1/4"	15.00	25.50	65.50	46.00	50.50	26.40	24.00	34.00	1.60	2.00	0.10	1.00
40	M40	1-1/4"	1-1/2"	15.00	26.00	65.50	55.00	60.50	32.30	28.00	40.60	1.60	2.00	0.10	1.00
50S	M50	1-1/2"	2"	15.00	26.50	72.50	60.00	66.00	38.50	35.50	46.70	2.00	2.50	0.10	1.00
50	M50	2"	2-1/2"	15.00	27.00	73.00	70.00	77.00	44.00	40.80	53.20	2.00	2.50	0.10	1.00
63S	M63	2"	2-1/2"	15.00	27.00	73.50	75.00	82.50	50.00	45.70	59.40	2.00	2.50	0.10	1.00
63	M63	2-1/2"	3"	15.00	40.00	73.50	81.00	89.00	56.20	54.80	66.10	2.00	2.50	0.10	1.00
75S	M75	2-1/2"	3"	15.00	40.00	82.50	91.00	100.00	62.00	59.50	72.20	2.00	2.50	0.10	1.00
75	M75	3"	3-1/2"	15.00	42.00	88.50	100.00	110.00	68.00	67.00	79.50	2.50	3.15	0.10	1.00
90	M90	3-1/2"	4"	20.00	43.00	95.50	114.00	125.25	80.00	75.00	90.50	2.75	3.50	0.10	1.00

All dimensions are in millimetres (Except * where dimensions are in inches)

ATEX IECEx CE IP66 IP68

export@cabexindia.com

Ex E1FU CABLE GLAND

Ex E1FU type Hazardous Area Cable Gland Certified in Flamproof (Type 'db'), Increased Safety (Type 'eb') & Dust Ignition Protection (Type 'ta') for Indoor & Outdoor use in Zone 1, 2, 20, 21 & 22 hazardous areas with all types of armoured cable, providing an Environmental Seal on cable Inner Bedding & Outer Sheath, also providing Mechanical Cable Retention & an Electrical Continuity via armour wire termination.

Ex db | **Ex eb** | **Ex ta**

For Group I, II & III

Technical Data	
Type	Ex E1FU
Design Specification	BS 6121: Part 1:1989, IEC 62444 : 2010 & EN 62444 : 2013
Mechanical Classification**	Retention = Class D, Impact = Level 8
Electrical Classification**	Category B
Enclosure Protection	IK10 to IEC 62262 (20 Joule) Brass & Stainless Steel Only
Operating Temperature	-40° C to + 85° C
Ingress Protection Rating	IP 66 / IP 68***
Standard Gland Material	Brass (BS EN 12164 / Grade CuZn39Pb3)
Seal Material	Thermoset Elastomer
Standard Thread	ISO Metric / NPT
Cable Type	Wire Braid Armour, Strip Armour, Pliable Wire Armour, Steel Tape Armour, Single Wire Armour, Aluminium Wire Armour
Armour Clamping	Detachable Armour Cone & Universal Armour Clamping Ring
Sealing Technique	Inner Displacement Seal & Load Retention Outer Seal
Sealing Area	Cable Inner Bedding & Outer Sheath
Optional Gland Material	Brass Nickel Plated, Brass Electroless Nickel Plated, Stainless Steel (SS316 & SS316L)
Optional Accessories	Adaptor, Reducer, Earth Tag, Lock Nut, Entry Thread Nylon & Fiber Washer, Serrated Washer, Shroud
Global Certification	
Compliance Standards	EN/IEC 60079-0, 1, 7, 31
ATEX Certificate	DNV 22ATEX73142X
Code of Protection	Ex | M2 Ex || 2G 1D CE 2460, IP66/IP68
IECEx Certificate	IECEx DNV 22.0002X
Code of Protection	Ex db | Mb Ex eb | Mb, Ex db ||C Gb Ex eb ||C Gb, Ex ta |||C Da
EAC Certificate	Applied for Certificate
DNV GL Certificate	Applied for Certificate
ABS Certificate	Applied for Certificate
PESO Certificate	Applied for Certificate

** Mechanical & Electrical Classification applied as per IEC / EN 62444
*** IP 68 : Tested at 30m depth for 7 days (Alternate depth & duration can be provided upon request)

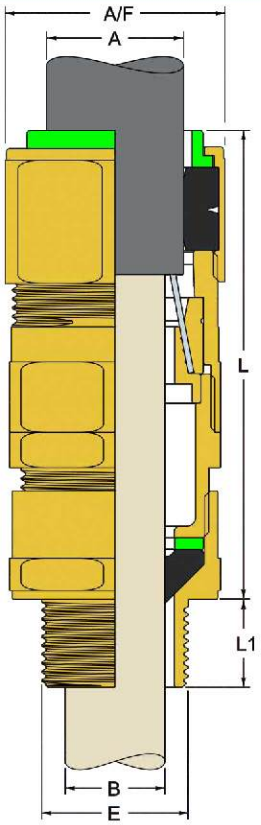

Ex E1FU Cable Gland Selection Table

Cable Gland Size	Gland Dimensions								Cable Dimensions							
	Entry Thread E			Minimum Thread Length		Maximum Length	Across Flats	Across Corners	Cable Bedding Diameter		Overall Cable Diameter		Armour Range			
	Standard		Option	L1		L	AF	AC	B		A		Direction 1		Direction 2	
	Metric	NPT*	NPT*	Metric	NPT	Max.	Max.	Max.	Min.	Max.	Min.	Max.	Min.	Max.	Min.	Max.
20S/16	M20	1/2"	3/4"	15.00	20.00	73.50	24.00	26.50	3.10	8.70	6.10	11.60	0.80	1.25	0.10	1.00
20S	M20	1/2"	3/4"	15.00	20.00	73.50	24.00	26.50	7.00	11.70	9.50	16.00	0.80	1.25	0.10	1.00
20	M20	1/2"	3/4"	15.00	20.00	76.00	31.00	34.00	10.00	14.00	12.50	21.20	0.80	1.25	0.10	1.00
25S	M25	3/4"	1"	15.00	20.50	88.50	37.50	41.25	11.00	16.00	14.10	22.00	1.25	1.60	0.10	1.00
25	M25	3/4"	1"	15.00	20.50	91.50	37.50	41.25	14.50	20.00	18.50	26.30	1.25	1.60	0.10	1.00
32	M32	1"	1-1/4"	15.00	25.50	95.50	46.00	50.50	18.50	26.40	24.00	34.00	1.60	2.00	0.10	1.00
40	M40	1-1/4"	1-1/2"	15.00	26.00	96.50	55.00	60.50	25.00	32.30	28.00	40.60	1.60	2.00	0.10	1.00
50S	M50	1-1/2"	2"	15.00	26.50	101.00	60.00	66.00	31.50	38.50	35.50	46.70	2.00	2.50	0.10	1.00
50	M50	2"	2-1/2"	15.00	27.00	105.50	70.00	77.00	36.50	44.00	40.80	53.20	2.00	2.50	0.10	1.00
63S	M63	2"	2-1/2"	15.00	27.00	103.00	75.00	82.50	42.50	50.00	45.70	59.40	2.00	2.50	0.10	1.00
63	M63	2-1/2"	3"	15.00	40.00	107.00	81.00	89.00	48.50	56.20	54.80	66.10	2.00	2.50	0.10	1.00
75S	M75	2-1/2"	3"	15.00	40.00	114.50	91.00	100.00	55.00	62.00	59.50	72.20	2.00	2.50	0.10	1.00
75	M75	3"	3-1/2"	15.00	42.00	126.00	100.00	110.00	61.50	68.00	67.00	79.50	2.50	3.15	0.10	1.00
90	M90	3-1/2"	4"	20.00	43.00	144.50	114.00	125.25	65.00	80.00	75.00	90.50	2.75	3.50	0.10	1.00

All dimensions are in millimetres (Except * where dimensions are in inches)

ATEX | IECEx | CE | IP66 | IP68

EX HIGH TEMPERATURE CABLE GLAND

Ex A2F-HIGH TEMPERATURE CABLE GLAND

CABEX®

Ex A2F-HT type Hazardous Area Cable Gland Certified in Flamproof (Type 'db'), Increased Safety (Type 'eb') & Dust Ignition protection (Type 'ta') for Indoor & Outdoor use in Zone 1,2,20,21 & 22 hazardous areas with Unarmoured & Braided Cable providing a combined Flameproof Seal & an Environmental Seal on the cable Outer Sheath.

Technical Data	
Type	Ex A2F-HT (High Temperature)
Design Specification	BS 6121: Part 1:1989, IEC 62444 : 2010 & EN 62444 : 2013
Mechanical Classification**	Retention = Class B, Impact = Level 8
Electrical Classification**	Category A
Enclosure Protection	IK10 to IEC 62262 (20 Joule) Brass & Stainless Steel Only
Operating Temperature	-55° C to + 175° C
Ingress Protection Rating	IP 66 / IP 68***
Standard Gland Material	Brass (BS EN 12164/Grade CuZn39Pb3)
Seal Material	Thermoset Elastomer
Standard Thread	ISO Metric / NPT
Cable Type	Unarmoured & Braided
Sealing Technique	Inner Displacement Seal
Sealing Area	Cable Outer Sheath
Optional Gland Material	Brass Nickel Plated, Brass Electroless Nickel Plated, Stainless Steel (SS316 & SS316L)
Optional Accessories	Adaptor, Reducer, Earth Tag, Lock Nut, Entry Thread Nylon & Fiber Washer, Serrated Washer, Shroud
Global Certification	
Compliance Standards	EN/IEC 60079-0, 1, 7, 31
ATEX Certificate	DNV 22ATEX73142X
Code of Protection	Ex || 2G 1D CE 2460, IP66/IP68
IECEx Certificate	IECEx DNV 22.0002X
Code of Protection	Ex db ||C Gb, Ex eb ||C Gb, Ex ta |||C Da
EAC Certificate	Applied for Certificate
DNV GL Certificate	Applied for Certificate
ABS Certificate	Applied for Certificate
PESO Certificate	Applied for Certificate

** Mechanical & Electrical Classification applied as per IEC / EN 62444
*** IP 68 : Tested at 30m depth for 7 days (Alternate depth & duration can be provided upon request)

Ex db | **Ex eb** | **Ex ta**

For Group II & III

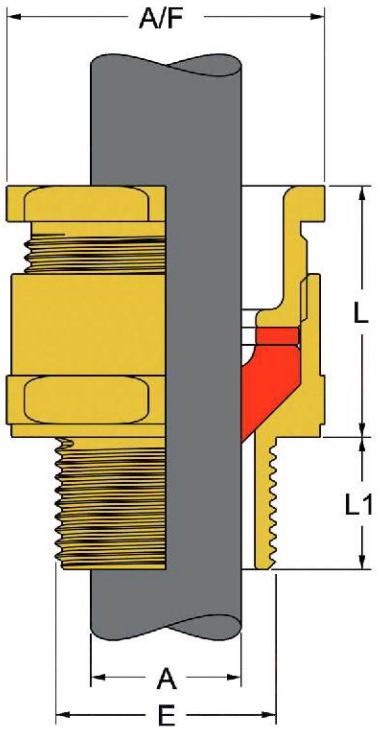

Ex A2F-HT Cable Gland Selection Table

Cable Gland Size	Gland Dimensions								Cable Dimensions	
	Entry Thread E			Minimum Thread Length		Maximum Length	Across Flats	Across Corners	Overall Cable Diameter	
	Standard		Option	L1		L	AF	AC	A	
	Metric	NPT*	NPT*	Metric	NPT	Max.	Max.	Max.	Min.	Max.
20S/16	M20	1/2"	3/4"	15.00	20.00	25.00	24.00	26.25	3.10	8.70
20S	M20	1/2"	3/4"	15.00	20.00	25.00	25.00	27.50	7.00	11.70
20	M20	1/2"	3/4"	15.00	20.00	26.00	27.00	29.75	10.00	14.00
25S	M25	3/4"	1"	15.00	20.50	29.00	31.00	34.00	11.00	16.00
25	M25	3/4"	1"	15.00	20.50	32.00	36.00	39.50	14.50	20.00
32	M32	1"	1-1/4"	15.00	25.50	33.00	44.00	48.50	18.50	26.40
40	M40	1-1/4"	1-1/2"	15.00	26.00	35.00	52.00	57.25	25.00	32.30
50S	M50	1-1/2"	2"	15.00	26.50	33.00	58.00	63.75	31.50	38.50
50	M50	2"	2-1/2"	15.00	27.00	36.50	63.00	69.25	36.50	44.00
63S	M63	2"	2-1/2"	15.00	27.00	34.00	72.00	79.00	42.50	50.00
63	M63	2-1/2"	3"	15.00	40.00	38.00	80.00	88.00	48.50	56.20
75S	M75	2-1/2"	3"	15.00	40.00	36.50	83.00	91.25	55.00	62.00
75	M75	3"	3-1/2"	15.00	42.00	42.50	90.00	99.00	61.50	68.00
90	M90	3-1/2"	4"	20.00	43.00	53.50	106.00	116.50	65.00	80.00

All dimensions are in millimetres (Except * where dimensions are in inches)

ATEX | IECEx | CE | IP66 | IP68

Ex CFU-HIGH TEMPERATURE CABLE GLAND

CABEX

Ex CFU-HT type Hazardous Area Cable Gland Certified in Increased Safety (Type 'eb') & Dust Ignition Protection (Type 'ta') for use in Zone1,2,20,21 & 22 hazardous areas with all types of Armour cable providing an Environmental Seal on the cable Outer Sheath, also providing Mechanical Cable Retention & an Electrical Continuity via armour wire termination.This is a High Temperature Cable Gland.

Technical Data	
Type	Ex CFU-HT (High Temperature)
Design Specification	BS 6121: Part 1:1989, IEC 62444 : 2010 & EN 62444 : 2013
Mechanical Classification**	Retention = Class D, Impact = Level 8
Electrical Classification**	Category B
Enclosure Protection	IK10 to IEC 62262 (20 Joule) Brass & Stainless Steel Only
Operating Temperature	-55° C to + 175° C
Ingress Protection Rating	IP 66 / IP 68***
Standard Gland Material	Brass (BS EN 12164 / Grade CuZn39Pb3)
Seal Material	Thermoset Elastomer
Standard Thread	ISO Metric / NPT
Cable Type	Wire Braid Armour, Strip Armour, Pliable Wire Armour, Steel Tape Armour, Single Wire Armour, Aluminium Wire Armour
Armour Clamping	Detachable Armour Cone & Universal Armour Clamping Ring
Sealing Technique	Load Retention Outer Seal
Sealing Area	Cabel Outer Sheath
Optional Gland Material	Brass Nickel Plated, Brass Electroless Nickel Plated, Stainless Steel (SS316 & SS316L)
Optional Accessories	Adaptor, Reducer, Earth Tag, Lock Nut, Entry Thread Nylon & Fiber Washer, Serrated Washer, Shroud
Global Certification	
Compliance Standards	EN/IEC 60079-0, 1, 7, 31
ATEX Certificate	DNV 22ATEX73142X
Code of Protection	Ex | M2 Ex || 2G 1D CE 2460, IP66/IP68
IECEx Certificate	IECEx DNV 22.0002X
Code of Protection	Ex eb | Mb, Ex eb ||C Gb, Ex ta |||C Da
EAC Certificate	Applied for Certificate
DNV GL Certificate	Applied for Certificate
ABS Certificate	Applied for Certificate
PESO Certificate	Applied for Certificate

** Mechanical & Electrical Classification applied as per IEC / EN 62444
*** IP 68 : Tested at 30m depth for 7 days (Alternate depth & duration can be provided upon request)

Ex eb **Ex ta**

For Group I, II & III

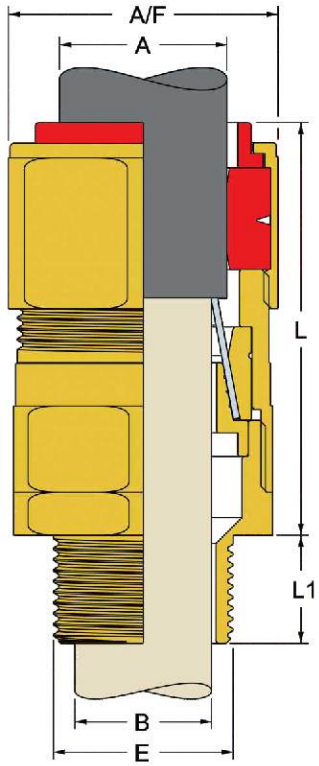

Ex CFU-HT Cable Gland Selection Table

Cable Gland Size	Gland Dimensions								Cable Dimensions						
	Entry Thread E			Minimum Thread Length		Maximum Length	Across Flats	Across Corners	Cable Bedding Diameter	Overall Cable Diameter		Armour Range			
	Standard		Option	L1		L	AF	AC	B	A		Direction 1		Direction 2	
	Metric	NPT*	NPT*	Metric	NPT	Max.	Max.	Max.	Max.	Min.	Max.	Min.	Max.	Min.	Max.
20S/16	M20	1/2"	3/4"	15.00	20.00	52.25	24.00	26.50	8.70	6.10	11.60	0.80	1.25	0.10	1.00
20S	M20	1/2"	3/4"	15.00	20.00	52.25	24.00	26.50	11.70	9.50	16.00	0.80	1.25	0.10	1.00
20	M20	1/2"	3/4"	15.00	20.00	52.50	31.00	34.00	14.00	12.50	21.20	0.80	1.25	0.10	1.00
25S	M25	3/4"	1"	15.00	20.50	64.00	37.50	41.25	16.00	14.10	22.00	1.25	1.60	0.10	1.00
25	M25	3/4"	1"	15.00	20.50	64.00	37.50	41.25	20.00	18.50	26.30	1.25	1.60	0.10	1.00
32	M32	1"	1-1/4"	15.00	25.50	65.50	46.00	50.50	26.40	24.00	34.00	1.60	2.00	0.10	1.00
40	M40	1-1/4"	1-1/2"	15.00	26.00	65.50	55.00	60.50	32.30	28.00	40.60	1.60	2.00	0.10	1.00
50S	M50	1-1/2"	2"	15.00	26.50	72.50	60.00	66.00	38.50	35.50	46.70	2.00	2.50	0.10	1.00
50	M50	2"	2-1/2"	15.00	27.00	73.00	70.00	77.00	44.00	40.80	53.20	2.00	2.50	0.10	1.00
63S	M63	2"	2-1/2"	15.00	27.00	73.50	75.00	82.50	50.00	45.70	59.40	2.00	2.50	0.10	1.00
63	M63	2-1/2"	3"	15.00	40.00	73.50	81.00	89.00	56.20	54.80	66.10	2.00	2.50	0.10	1.00
75S	M75	2-1/2"	3"	15.00	40.00	82.50	91.00	100.00	62.00	59.50	72.20	2.00	2.50	0.10	1.00
75	M75	3"	3-1/2"	15.00	42.00	88.50	100.00	110.00	68.00	67.00	79.50	2.50	3.15	0.10	1.00
90	M90	3-1/2"	4"	20.00	43.00	95.50	114.00	125.25	80.00	75.00	90.50	2.75	3.50	0.10	1.00

All dimensions are in millimetres (Except * where dimensions are in inches)

ATEX IECEx CE IP66 IP68

export@cabexindia.com

Ex E1FU-HIGH TEMPERATURE CABLE GLAND

CABEX®

Ex E1FU-HT type Hazardous Area Cable Gland Certified in Flamproof (Type 'db'), Increased Safety (Type 'eb') & Dust Ignition Protection (Type 'ta') for Indoor & Outdoor use in Zone 1,2,20,21 & 22 hazardous areas with all types of armoured cable, providing an Environmental Seal on cable Inner Bedding & Outer Sheath, also providing Mechanical Cable Retention & an Electrical Continuity via armour wire termination.

Ex db | **Ex eb** | **Ex ta**

For Group I, II & III

Technical Data	
Type	Ex E1FU-HT (High Temperature)
Design Specification	BS 6121: Part 1:1989, IEC 62444 : 2010 & EN 62444 : 2013
Mechanical Classification**	Retention = Class D, Impact = Level 8
Electrical Classification**	Category B
Enclosure Protection	IK10 to IEC 62262 (20 Joule) Brass & Stainless Steel Only
Operating Temperature	-55° C to + 175° C
Ingress Protection Rating	IP 66 / P 68***
Standard Gland Material	Brass (BS EN 12164 / Grade CuZn39Pb3)
Seal Material	Thermoset Elastomer
Standard Thread	ISO Metric / NPT
Cable Type	Wire Braid Armour, Strip Armour, Pliable Wire Armour, Steel Tape Armour, Single Wire Armour, Aluminium Wire Armour
Armour Clamping	Detachable Armour Cone & Universal Armour Clamping Ring
Sealing Technique	Inner Displacement Seal & Load Retention Outer Seal
Sealing Area	Cable Inner Bedding & Outer Sheath
Optional Gland Material	Brass Nickel Plated, Brass Electroless Nickel Plated, Stainless Steel (SS316 & SS316L)
Optional Accessories	Adaptor, Reducer, Earth Tag, Lock Nut, Entry Thread Nylon & Fiber Washer, Serrated Washer, Shroud
Global Certification	
Compliance Standards	EN/IEC 60079-0, 1, 7, 31
ATEX Certificate	DNV 22ATEX73142X
Code of Protection	Ex I M2 Ex II 2G 1D CE 2460, IP66/IP68
IECEx Certificate	IECEx DNV 22.0002X
Code of Protection	Ex db I Mb Ex eb I Mb, Ex db IIC Gb Ex eb IIC Gb, Ex ta IIIC Da
EAC Certificate	Applied for Certificate
DNV GL Certificate	Applied for Certificate
ABS Certificate	Applied for Certificate
PESO Certificate	Applied for Certificate

** Mechanical & Electrical Classification applied as per IEC / EN 62444
*** IP 68 : Tested at 30m depth for 7 days (Alternate depth & duration can be provided upon request)

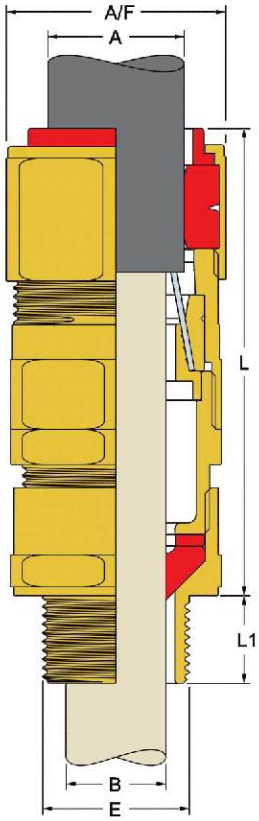

Ex E1FU-HT Cable Gland Selection Table

Cable Gland Size	Gland Dimensions								Cable Dimensions							
	Entry Thread E			Minimum Thread Length		Maximum Length	Across Flats	Across Corners	Cable Bedding Diameter		Overall Cable Diameter		Armour Range			
	Standard		Option	L1		L	AF	AC	B		A		Direction 1		Direction 2	
	Metric	NPT*	NPT*	Metric	NPT	Max.	Max.	Max.	Min.	Max.	Min.	Max.	Min.	Max.	Min.	Max.
20S/16	M20	1/2"	3/4"	15.00	20.00	73.50	24.00	26.50	3.10	8.70	6.10	11.60	0.80	1.25	0.10	1.00
20S	M20	1/2"	3/4"	15.00	20.00	73.50	24.00	26.50	7.00	11.70	9.50	16.00	0.80	1.25	0.10	1.00
20	M20	1/2"	3/4"	15.00	20.00	76.00	31.00	34.00	10.00	14.00	12.50	21.20	0.80	1.25	0.10	1.00
25S	M25	3/4"	1"	15.00	20.50	88.50	37.50	41.25	11.00	16.00	14.10	22.00	1.25	1.60	0.10	1.00
25	M25	3/4"	1"	15.00	20.50	91.50	37.50	41.25	14.50	20.00	18.50	26.30	1.25	1.60	0.10	1.00
32	M32	1"	1-1/4"	15.00	25.50	95.50	46.00	50.50	18.50	26.40	24.00	34.00	1.60	2.00	0.10	1.00
40	M40	1-1/4"	1-1/2"	15.00	26.00	96.50	55.00	60.50	25.00	32.30	28.00	40.60	1.60	2.00	0.10	1.00
50S	M50	1-1/2"	2"	15.00	26.50	101.00	60.00	66.00	31.50	38.50	35.50	46.70	2.00	2.50	0.10	1.00
50	M50	2"	2-1/2"	15.00	27.00	105.50	70.00	77.00	36.50	44.00	40.80	53.20	2.00	2.50	0.10	1.00
63S	M63	2"	2-1/2"	15.00	27.00	103.00	75.00	82.50	42.50	50.00	45.70	59.40	2.00	2.50	0.10	1.00
63	M63	2-1/2"	3"	15.00	40.00	107.00	81.00	89.00	48.50	56.20	54.80	66.10	2.00	2.50	0.10	1.00
75S	M75	2-1/2"	3"	15.00	40.00	114.50	91.00	100.00	55.00	62.00	59.50	72.20	2.00	2.50	0.10	1.00
75	M75	3"	3-1/2"	15.00	42.00	126.00	100.00	110.00	61.50	68.00	67.00	79.50	2.50	3.15	0.10	1.00
90	M90	3-1/2"	4"	20.00	43.00	144.50	114.00	125.25	65.00	80.00	75.00	90.50	2.75	3.50	0.10	1.00

All dimensions are in millimetres (Except * where dimensions are in inches)

ATEX | IECEx | CE | IP66 | IP68

ORDERING CHART FOR HAZARDOUS AREA CABLE GLANDS

CABEX®

e.g. CECEx20E1FU-2BR-N02

STANDARD CODE (Table A)	SIZE (Table B)	TYPE (Table C)		SUPPLY (Table D)	MATERIAL (Table E)		ENTRY THREAD TYPE (Table F)	ENTRY THREAD SIZE (Table G)
CECEx	20	E1FU	-	2	BR	-	N	02
Table A	Table B	Table C		Table D	Table E		Table F	Table G

Standard Code		Cable Gland Size	Type	Supply		Material		Entry Thread Type		Entry Thread Size		
											METRIC	NPT
CECEx	CABEX Ex SERIES	20S/16	A2F	1	GLAND	BR	BRASS	M	METRIC	00	-	3/8"
		20S	CFU	2	PACK*	BN	BRASS NICKEL PLATED	N	NPT	01	16	1/2"
		20	E1FU			BE	BRASS ELECTROLESS NICKEL PLATED			02	20	3/4"
		25S	A2F-HT			SS	STAINLESS STEEL 316 & 316L			03	25	1"
		25	CFU-HT							04	32	1-1/4"
		32	E1FU-HT							05	40	1-1/2"
		40								06	50	2"
		50S								07	63	2-1/2"
		50								08	75	3"
		63S								09	80	3-1/2"
		63								10	85	4"
		75S								11	90	-
		75								12	100	-
		90										

*Standard Kit - 1 Gland , 1 Lock Nut , 1 Earth Tag, 1 Nylon IP Washer , 1 Shroud
Optional Kit - Available on request

export@cabexindia.com

Ex Thread Conversion & Blanking Plug	56 to 63
1) Ex ADAPTOR	56-57
2) Ex REDUCER	58-59
3) Ex STOPPING PLUG (Flat Head Type)	60
4) Ex STOPPING PLUG (Dome Head Type)	61
5) Ex STOPPING PLUG (Hexagon Head Type)	62
6) Ex STOPPING PLUG (Tamperproof Internal / Non - Tamperproof External Type)	63
Ordering Chart for Ex Thread Conversion & Blanking Plug	64

export@cabexindia.com

Ex ADAPTOR

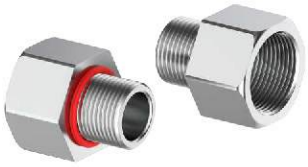

Thread conversion Adaptors is designed to provide flexibility and versatility in the execution of construction works when there is a conflict between the type or size of the Cable Gland Thread and the Cable Entry Hole in the equipment. Application: Change Smaller thread to larger thread.

Technical Data	
Type	Ex Adaptor
Design Specification	BS 6121: Part 1:1989, IEC 62444 : 2010 & EN 62444 : 2013
Enclosure Protection	IK10 to IEC 62262 (20 Joule) Brass & Stainless Steel Only
Standard Size	M 16 to M 100 (1/2" NPT to 4" NPT)
Optional Size	Other sizes available on request
Operating Temperature	-55° C to + 175° C*** / -40° C to + 100° C****
Ingress Protection Rating	IP 66 / IP 68** when fitted with 'O' Ring or Entry Thread sealing Washer
Standard Material	Brass (BS EN 12164 / Grade CuZn39Pb3)
Optional Material	Brass Nickel Plated, Stainless Steel (SS316 & SS316L)
Standard Thread	ISO Metric / NPT
Global Certification	
Compliance Standards	EN/IEC 60079-0, 1, 7, 31
ATEX Certificate	DNV 22ATEX16166X
Code of Protection	Ex | M2 Ex || 2G 1D CE 2460, IP66/IP68
IECEx Certificate	IECEx DNV 22.0003X
Code of Protection	Ex db | Mb Ex eb | Mb, Ex db ||C Gb Ex eb ||C Gb, Ex ta |||C Da
EAC Certificate	Applied for Certificate
DNV GL Certificate	Applied for Certificate
ABS Certificate	Applied for Certificate
PESO Certificate	Applied for Certificate

*** When fitted with Silicon O Ring / **** When fitted with Nylon Washer
** IP 68 : Tested at 30m depth for 7 days (Alternate depth & duration can be provided upon request)

Ex db | **Ex eb** | **Ex ta**

For Group I, II & III

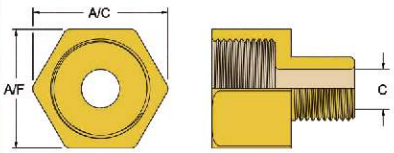

Ex Adaptor Selection Table 'A'

METRIC				NPT			
Thread Size	Max Bore	Across Flat	Across Corner	Thread Size*	Max Bore	Across Flat	Across Corner
	C	A/F	A/C		C	A/F	A/C
M16	9.70	20.00	22.50	1/2"	14.00	27.00	30.50
M20	14.00	24.00	27.00	3/4"	20.00	33.00	37.50
M25	20.00	30.00	34.00	1"	26.00	40.00	45.00
M32	26.00	37.50	42.50	1-1/4"	32.10	48.00	54.30
M40	32.10	46.00	52.00	1-1/2"	38.00	55.00	62.00
M50	44.20	55.00	62.00	2"	49.00	65.00	74.00
M63	53.00	70.00	80.00	2-1/2"	60.00	80.00	91.00
M75	68.00	85.00	95.00	3"	75.00	100.00	112.00
M80	71.00	90.00	100.50	3-1/2"	86.00	115.00	130.00
M85	76.00	95.00	106.00	4"	97.00	128.00	141.00
M90	79.30	100.00	112.00	-	-	-	-
M100	88.00	115.00	130.00	-	-	-	-

All dimensions are in millimetres (Except * where dimensions are in inches)

ATEX | IECEx | CE | IP66 | IP68

CABEX

1) Select Male Thread Size from the left hand column of Table 'B'.
2) Select the Female Thread size from the Table 'B'.
3) Using this code reference, please refer to the corresponding Product Selection in Table 'A'.

Ex db | Ex eb | Ex ta

Ex Adaptor Sizing Table 'B'

FEMALE THREAD — Metric Thread

MALE THREAD	M16	M20	M25	M32	M40	M50	M63	M75	M80	M85	M90	M100
Metric Thread												
M16	■	■	■	■								
M20		■	■	■	■							
M25			■	■	■	■						
M32				■	■	■	■					
M40					■	■	■	■				
M50						■	■	■	■			
M63							■	■	■	■		
M75								■	■	■	■	
M80									■		■	■
M85										■	■	■
M90											■	■
M100												
NPT Thread												
1/2"		■	■	■								
3/4"			■	■	■							
1"				■	■	■						
1-1/4"					■	■	■					
1-1/2"						■	■	■				
2"							■	■	■			
2-1/2"								■	■		■	
3"									■		■	■
3-1/2"											■	■
4"												■

NPT Thread

MALE THREAD	1/2"	3/4"	1"	1-1/4"	1-1/2"	2"	2-1/2"	3"	3-1/2"	4"
Metric Thread										
M16	■	■	■							
M20	■	■	■							
M25		■	■	■						
M32			■	■	■					
M40				■	■	■				
M50					■	■	■			
M63						■	■	■		
M75							■	■	■	
M80								■	■	
M85								■	■	
M90								■	■	
M100									■	■
NPT Thread										
1/2"		■	■							
3/4"			■	■	■					
1"				■	■	■				
1-1/4"					■	■	■			
1-1/2"						■	■	■		
2"							■	■		
2-1/2"								■	■	
3"									■	■
3-1/2"										■
4"										

■ **Ex db, Ex eb, Ex ta Certified Adaptor**

It should be noted that when using CABEX Thread Conversion Adaptors in association with Explosion Protected electrical equipment the following basic rules must be observed in line with good engineering practice.

> Each entry shall have no more than one thread adaptor when an adaptor is used. A blanking element shall not be used with an adaptor.

export@cabexindia.com

Ex REDUCER

Ex Reducer thread Conversion is designed to provide flexibility and versatility in the Execution of construction works when there is a conflict between the type or size of the Cable Gland thread and the cable entry hole in the equipment. Application: Change larger thread to smaller thread.

Technical Data	
Type	Ex Reducer
Design Specification	BS 6121: Part 1:1989, IEC 62444 : 2010 & EN 62444 : 2013
Enclosure Protection	IK10 to IEC 62262 (20 Joule) Brass & Stainless Steel Only
Standard Size	M 12 to M 100 (1/2" NPT to 4" NPT)
Optional Size	Other sizes available on request
Operating Temperature	-55° C to + 175° C*** / -40° C to + 100° C****
Ingress Protection Rating	IP 66 / IP 68** when fitted with 'O' Ring or Entry Thread sealing Washer
Standard Material	Brass (BS EN 12164 / Grade CuZn39Pb3)
Optional Material	Brass Nickel Plated, Stainless Steel (SS316 & SS316L)
Standard Thread	ISO Metric / NPT
Global Certification	
Compliance Standards	EN/IEC 60079-0,1,7,31
ATEX Certificate	DNV 22ATEX16166X
Code of Protection	Ex | M2 Ex || 2G 1D CE 2460, IP66/IP68
IECEx Certificate	IECEx DNV 22.0003X
Code of Protection	Ex db | Mb Ex eb | Mb, Ex db ||C Gb Ex eb ||C Gb, Ex ta |||C Da
EAC Certificate	Applied for Certificate
DNV GL Certificate	Applied for Certificate
ABS Certificate	Applied for Certificate
PESO Certificate	Applied for Certificate

Ex db | Ex eb | Ex ta

For Group I, II & III

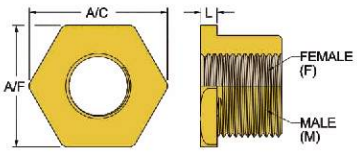

*** When fitted with Silicon O Ring / **** When fitted with Nylon Washer
** IP 68 : Tested at 30m depth for 7 days (Alternate depth & duration can be provided upon request)

Ex Reducer Selection Table 'A'

METRIC				NPT			
Thread Size	Head Lenght L	Across Flat A/F	Across Corner A/C	Thread Size*	Head Lenght L	Across Flat A/F	Across Corner A/C
M16	4.00	20.00	22.50	1/2"	4.00	27.00	30.50
M20	4.00	24.00	26.50	3/4"	4.00	33.00	37.50
M25	4.00	30.00	34.00	1"	4.00	40.00	45.00
M32	4.00	37.50	42.50	1-1/4"	5.00	48.00	54.30
M40	5.00	46.00	52.00	1-1/2"	5.00	55.00	62.00
M50	5.00	55.00	62.00	2"	6.00	65.00	74.00
M63	6.00	70.00	80.00	2-1/2"	8.00	80.00	91.00
M75	7.00	85.00	95.00	3"	10.00	100.00	110.00
M80	10.00	90.00	100.50	3-1/2"	10.00	115.00	130.00
M85	10.00	95.00	106.00	4"	10.00	128.00	141.00
M90	10.00	100.00	112.00	-	-	-	-
M100	10.00	115.00	130.00	-	-	-	-

All dimensions are in millimetres (Except * where dimensions are in inches)

ATEX | IECEx | CE | IP66 | IP68

1) Select Male Thread Size from the left hand column of Table 'B'.
2) Select the Female Thread size from the Table 'B'.
3) Using this code reference, please refer to the corresponding Product Selection in Table 'A'.

Ex db **Ex eb** **Ex ta**

Ex Reducer Sizing Table 'B'

FEMALE THREAD

Metric Thread

MALE THREAD	Size	M12	M16	M20	M25	M32	M40	M50	M63	M75	M80	M85	M90	M100
Metric Thread	M16	■												
	M20	■	■											
	M25	■	■	■										
	M32	■	■	■	■									
	M40		■	■	■	■								
	M50		■	■	■	■	■							
	M63		■	■	■	■	■	■						
	M75		■	■	■	■	■	■	■					
	M80		■	■	■	■	■	■	■	■				
	M85						■	■	■					
	M90		■	■	■	■	■	■	■	■				
	M100						■	■	■	■			■	
NPT Thread	1/2"	■	■											
	3/4"	■	■	■										
	1"	■	■	■	■									
	1-1/4"		■	■	■	■								
	1-1/2"		■	■	■	■	■							
	2"		■	■	■	■	■	■						
	2-1/2"		■	■	■	■	■	■	■					
	3"		■	■	■	■	■	■	■	■				
	3-1/2"		■	■	■	■	■	■	■	■	■			
	4"		■	■	■	■	■	■	■	■	■	■	■	■

NPT Thread

MALE THREAD	Size	3/8"	1/2"	3/4"	1"	1-1/4"	1-1/2"	2"	2-1/2"	3"	3-1/2"
Metric Thread	M16										
	M20	■									
	M25	■	■								
	M32	■	■	■							
	M40		■	■	■						
	M50		■	■	■	■					
	M63		■	■	■	■	■				
	M75		■	■	■	■	■	■			
	M80		■	■	■	■	■	■	■		
	M85						■	■	■		
	M90		■	■	■	■	■	■	■		
	M100				■	■	■	■	■	■	
NPT Thread	1/2"	■									
	3/4"	■	■								
	1"	■	■	■							
	1-1/4"		■	■	■						
	1-1/2"		■	■	■	■					
	2"		■	■	■	■	■				
	2-1/2"		■	■	■	■	■	■			
	3"		■	■	■	■	■	■	■		
	3-1/2"		■	■	■	■	■	■	■	■	
	4"		■	■	■	■	■	■	■	■	■

■ **Ex db, Ex eb, Ex ta Certified Reducer**

It should be noted that when using CABEX Thread Conversion Reducer in association with Explosion Protected electrical equipment the following basic rules must be observed in line with good engineering practice.

> Each entry shall have no more than one thread reducer when an reducer is used. A blanking element shall not be used with an reducer.

export@cabexindia.com

Ex STOPPING PLUG (FLAT HEAD TYPE)

CABEX®

Ex Stopping Plug is designed to provide a permanent or temporary means of blanking unused cable entry holes in Flameproof, Incareased Safety & Dust Ignition Protection Enclosures, enabling the equipment to be safely deployed in the hazardous area. These plugs are produced with a Flat Head as standard, and is equipped with an Alley Key recess making it impossible to remove withthout a standard spanner or wrench.

Technical Data	
Type	Ex Stopping Plug Flat Head
Design Specification	BS 6121: Part 1:1989, IEC 62444 : 2010 & EN 62444 : 2013
Enclosure Protection	IK10 to IEC 62262 (20 Joule) Brass & Stainless Steel Only
Standard Size	M16 to M100 (1/2" NPT to 4" NPT)
Optional Size	Other sizes available on request
Operating Temperature	-55° C to + 175° C*** / -40° C to + 100° C****
Ingress Protection Rating	IP 66 / IP 68** when fitted with 'O' Ring or Entry Thread sealing Washer
Standard Material	Brass (BS EN 12164 / Grade CuZn39Pb3)
Optional Material	Brass Nickel Plated, Stainless Steel (SS316 & SS316L)
Standard Thread	ISO Metric / NPT
Global Certification	
Compliance Standards	EN/IEC 60079-0, 1, 7, 31
ATEX Certificate	DNV 22ATEX16409X
Code of Protection	Ex I M2 Ex II 2G 1D CE 2460, IP66/IP68
IECEx Certificate	IECEx DNV 22.0004X
Code of Protection	(Metric) Ex db I Mb Ex eb I Mb, Ex db IIC Gb Ex eb IIC Gb, Ex ta IIIC Da (NPT) Ex eb I Mb, Ex eb IIC Gb, Ex ta IIIC Da
EAC Certificate	Applied for Certificate
DNV GL Certificate	Applied for Certificate
ABS Certificate	Applied for Certificate
PESO Certificate	Applied for Certificate

*** When fitted with Silicon O Ring / **** When fitted with Nylon Washer
** IP 68 : Tested at 30m depth for 7 days (Alternate depth & duration can be provided upon request)

Ex db | **Ex eb** | **Ex ta**

For Group I, II & III

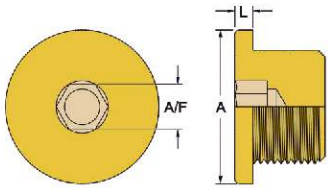

Ex Stopping Plug Flat Head Selection Table

METRIC				NPT			
Thread Size	Head Lenght L	Head Diameter A	Allen Key Size A/F	Thread Size*	Head Lenght L	Head Diameter A	Allen Key Size A/F
M16 x 1.5	4.00	24.00	8.00	1/2"	4.00	28.00	10.00
M20 x 1.5	4.00	28.00	10.00	3/4"	4.00	34.00	10.00
M25 x 1.5	4.00	34.00	10.00	1"	4.00	44.00	10.00
M32 x 1.5	4.00	44.00	10.00	1-1/4"	5.00	52.00	10.00
M40 x 1.5	5.00	52.00	10.00	1-1/2"	6.00	62.00	10.00
M50 x 1.5	6.00	62.00	10.00	2"	7.00	75.00	10.00
M63 x 1.5	7.00	75.00	10.00	2-1/2"	8.00	88.00	10.00
M75 x 1.5	8.00	88.00	10.00	3"	8.00	105.00	12.00
M80 x 2.0	8.00	95.00	12.00	3-1/2"	8.00	115.00	12.00
M85 x 2.0	8.00	100.00	12.00	4"	8.00	130.00	12.00
M90 x 2.0	8.00	105.00	12.00	-	-	-	-
M100 x 2.0	8.00	125.00	12.00	-	-	-	-

All dimensions are in millimetres (Except * where dimensions are in inches)

ATEX | IECEx | CE | IP66 | IP68

Ex STOPPING PLUG (DOME HEAD TYPE)

Ex Stopping Plug is designed to provide a permanent or temporary means of blanking unused cable entry holes in Flameproof, Incareased Safety & Dust Ignition Protection Enclosures, enabling the equipment to be safely deployed in the hazardous area. These plugs are produced with a Dome Head as standard, and is equipped with an Alley Key recess making it impossible to remove without a standard spanner or wrench.

Technical Data	
Type	Ex Stopping Plug Dome Head
Design Specification	BS 6121: Part 1:1989, IEC 62444 : 2010 & EN 62444 : 2013
Enclosure Protection	IK10 to IEC 62262 (20 Joule) Brass & Stainless Steel Only
Standard Size	M16 to M100 (1/2" NPT to 4" NPT)
Optional Size	Other sizes available on request
Operating Temperature	-55° C to + 175° C*** / -40° C to + 100° C****
Ingress Protection Rating	IP 66 / IP 68** when fitted with 'O' Ring or Entry Thread sealing Washer
Standard Material	Brass (BS EN 12164 / Grade CuZn39Pb3)
Optional Material	Brass Nickel Plated, Stainless Steel (SS316 & SS316L)
Standard Thread	ISO Metric / NPT
Global Certification	
Compliance Standards	EN/IEC 60079-0, 1, 7, 31
ATEX Certificate	DNV 22ATEX16409X
Code of Protection	Ex I M2 Ex II 2G 1D CE 2460, IP66/IP68
IECEx Certificate	IECEx DNV 22.0004X
Code of Protection	(Metric) Ex db I Mb Ex eb I Mb, Ex db IIC Gb Ex eb IIC Gb, Ex ta IIIC Da (NPT) Ex eb I Mb, Ex eb IIC Gb, Ex ta IIIC Da
EAC Certificate	Applied for Certificate
DNV GL Certificate	Applied for Certificate
ABS Certificate	Applied for Certificate
PESO Certificate	Applied for Certificate

*** When fitted with Silicon O Ring / **** When fitted with Nylon Washer
** IP 68 : Tested at 30m depth for 7 days (Alternate depth & duration can be provided upon request)

Ex db **Ex eb** **Ex ta**

For Group I, II & III

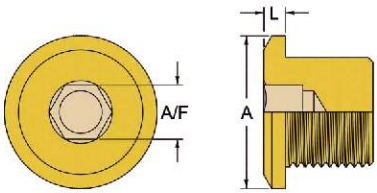

Ex Stopping Plug Dome Head Selection Table

METRIC				NPT			
Thread Size	Head Lenght L	Head Diameter A	Allen Key Size A/F	Thread Size*	Head Lenght L	Head Diameter A	Allen Key Size A/F
M16 x 1.5	4.00	24.00	8.00	1/2"	4.00	28.00	10.00
M20 x 1.5	4.00	28.00	10.00	3/4"	4.00	34.00	10.00
M25 x 1.5	4.00	34.00	10.00	1"	4.00	44.00	10.00
M32 x 1.5	4.00	44.00	10.00	1-1/4"	5.00	52.00	10.00
M40 x 1.5	5.00	52.00	10.00	1-1/2"	6.00	62.00	10.00
M50 x 1.5	6.00	62.00	10.00	2"	7.00	75.00	10.00
M63 x 1.5	7.00	75.00	10.00	2-1/2"	8.00	88.00	10.00
M75 x 1.5	8.00	88.00	10.00	3"	8.00	105.00	12.00
M80 x 2.0	8.00	95.00	12.00	3-1/2"	8.00	115.00	12.00
M85 x 2.0	8.00	100.00	12.00	4"	8.00	130.00	12.00
M90 x 2.0	8.00	105.00	12.00	-	-	-	-
M100 x 2.0	8.00	125.00	12.00	-	-	-	-

All dimensions are in millimetres (Except * where dimensions are in inches)

ATEX IECEx CE IP66 IP68

export@cabexindia.com

Ex STOPPING PLUG (HEX HEAD TYPE)

CABEX®

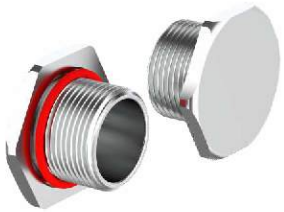

Ex Stopping Plug is designed to provide a permanent or temporary means of blanking unused cable entry holes in Incareased Safety & Dust Ignition Protection Enclosures, enabling the equipment to be safely deployed in the hazardous area. These plugs are produced with a Hexagon Head, making it possible to install or remove with either an open ended or ring type spanner or wrench.

Technical Data	
Type	Ex Stopping Plug Hex Head
Design Specification	BS 6121: Part 1:1989, IEC 62444 : 2010 & EN 62444 : 2013
Enclosure Protection	IK10 to IEC 62262 (20 Joule) Brass & Stainless Steel Only
Standard Size	M16 to M100 (1/2" NPT to 4" NPT)
Optional Size	Other sizes available on request
Operating Temperature	-55° C to + 175° C*** / -40° C to + 100° C****
Ingress Protection Rating	IP 66 / IP 68** when fitted with 'O' Ring or Entry Thread sealing Washer
Standard Material	Brass (BS EN 12164 / Grade CuZn39Pb3)
Optional Material	Brass Nickel Plated, Stainless Steel (SS316 & SS316L)
Standard Thread	ISO Metric / NPT
Global Certification	
Compliance Standards	EN/IEC 60079-0, 1, 7, 31
ATEX Certificate	DNV 22ATEX16409X
Code of Protection	Ex I M2 Ex II 2G 1D CE 2460, IP66/IP68
IECEx Certificate	IECEx DNV 22.0004X
Code of Protection	Ex eb I Mb, Ex eb IIC Gb, Ex ta IIIC Da
EAC Certificate	Applied for Certificate
DNV GL Certificate	Applied for Certificate
ABS Certificate	Applied for Certificate
PESO Certificate	Applied for Certificate

Ex eb **Ex ta**

For Group I, II & III

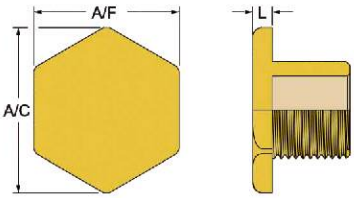

*** When fitted with Silicon O Ring / **** When fitted with Nylon Washer
** IP 68 : Tested at 30m depth for 7 days (Alternate depth & duration can be provided upon request)

Ex Stopping Plug Hex Head Selection Table

METRIC				NPT			
Thread Size	Head Lenght L	Across Flat A/F	Across Corner A/C	Thread Size*	Head Lenght L	Across Flat A/F	Across Corner A/C
M16 x 1.5	4.00	24.00	27.00	1/2"	4.00	30.00	34.00
M20 x 1.5	4.00	30.00	34.00	3/4"	4.00	36.00	40.50
M25 x 1.5	4.00	36.00	40.50	1"	4.00	46.00	52.00
M32 x 1.5	4.00	46.00	52.00	1-1/4"	5.00	55.00	62.00
M40 x 1.5	5.00	55.00	62.00	1-1/2"	6.00	65.00	73.50
M50 x 1.5	6.00	65.00	73.50	2"	7.00	80.00	88.00
M63 x 1.5	7.00	80.00	90.00	2-1/2"	8.00	95.00	104.50
M75 x 1.5	8.00	95.00	106.50	3"	8.00	110.00	121.00
M80 x 2.0	8.00	105.00	116.50	3-1/2"	8.00	115.00	126.50
M85 x 2.0	8.00	105.00	116.50	4"	8.00	128.00	141.00
M90 x 2.0	8.00	110.00	121.00	-	-	-	-
M100 x 2.0	8.00	125.00	137.50	-	-	-	-

All dimensions are in millimetres (Except * where dimensions are in inches)

ATEX IECEx CE IP66 IP68

Ex STOPPING PLUG (TAMPERPROOF - INTERNAL & NON - TAMPERPROOF EXTERNAL)

CABEX

Ex Stopping Plug is designed to provide a permanent or temporary means of blanking unused cable entry holes in Flameproof, Increased Safety & Dust Ignition Protection Enclosures, enabling the equipment to be safely deployed in the hazardous area. These plugs are available with both Internal and External Allen Key facility.

Technical Data	
Type	Ex Stopping Plug (Tamperproof - Internal / Non Tamperproof External)
Design Specification	BS 6121: Part 1:1989, IEC 62444 : 2010 & EN 62444 : 2013
Enclosure Protection	IK10 to IEC 62262 (20 Joule) Brass & Stainless Steel Only
Standard Size	M16 to M100 (1/2" NPT to 4" NPT)
Optional Size	Other sizes available on request
Operating Temperature	-55° C to + 175° C***
Ingress Protection Rating	IP 66 / IP 68** when fitted with 'O' Ring
Standard Material	Brass (BS EN 12164 / Grade CuZn39Pb3)
Optional Material	Brass Nickle Plated, Stainless Steel (SS316 & SS316L)
Standard Thread	ISO Metric / NPT
Global Certification	
Compliance Standards	EN/IEC 60079-0, 1, 7, 31
ATEX Certificate	DNV 22ATEX16409X
Code of Protection	Ex I M2 Ex II 2G 1D CE 2460, IP66/IP68
IECEx Certificate	IECEx DNV 22.0004X
Code of Protection	Ex db I Mb Ex eb I Mb, Ex db IIC Gb Ex eb IIC Gb, Ex ta IIIC Da
EAC Certificate	Applied for Certificate
DNV GL Certificate	Applied for Certificate
ABS Certificate	Applied for Certificate
PESO Certificate	Applied for Certificate

*** When fitted with Silicon O Ring
** IP 68 : Tested at 30m depth for 7 days (Alternate depth & duration can be provided upon request)

Ex db **Ex eb** **Ex ta**

For Group I, II & III

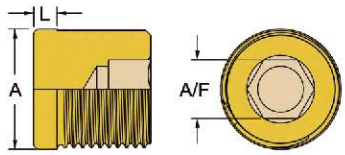

Internal

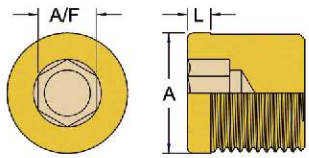

External

Ex Stopping Plug (Internal / External) Selection Table							
METRIC				**NPT**			
Thread Size	Head Lenght L	Head Diameter A	Allen Key Size A/F	Thread Size*	Head Lenght L	Head Diameter A	Allen Key Size A/F
M16 x 1.5	4.00	16.50	8.00	1/2"	4.00	22.00	10.00
M20 x 1.5	4.00	20.50	10.00	3/4"	4.00	27.50	10.00
M25 x 1.5	4.00	25.50	10.00	1"	4.00	34.00	10.00
M32 x 1.5	4.00	32.50	10.00	1-1/4"	4.00	43.00	10.00
M40 x 1.5	4.00	40.50	10.00	1-1/2"	4.00	49.00	10.00
M50 x 1.5	4.00	50.50	10.00	2"	4.00	60.50	10.00
M63 x 1.5	4.00	63.50	10.00	2-1/2"	4.00	74.00	10.00
M75 x 1.5	4.00	75.50	10.00	3"	4.00	89.50	12.00
M80 x 2.0	4.00	80.50	12.00	3-1/2"	4.00	103.00	12.00
M85 x 2.0	4.00	85.50	12.00	4"	4.00	115.00	12.00
M90 x 2.0	4.00	90.50	12.00	-	-	-	-
M100 x 2.0	4.00	100.50	12.00	-	-	-	-
All dimensions are in millimetres (Except * where dimensions are in inches)							

ATEX IECEx CE IP66 IP68

export@cabexindia.com

Ordering Chart for Ex Thread Conversion & Blanking Plug

e.g. CECExAD-BR-M02N02-OR (For Adaptor) / e.g. CECExSPHH-BR-M02-OR (For Stopping Plug Hex Head)

STANDARD CODE (Table A)	PRODUCT TYPE (Table B)		MATERIAL (Table C)		MALE*THREAD TYPE & SIZE (Table D & E)	FEMALE*THREAD TYPE & SIZE (Table D & E)		OPTION (Table F)
CECEx	AD	–	BR	–	M 02	N 02	–	OR
CECEx	SPHH	–	BR	–	M 02	-	–	OR

TABLE A

Standard Code	
CECEx	CABEX Ex Series

TABLE B

Product Code	
AD	ADAPTOR
RD	REDUCER
SPFH	STOPPING PLUG FLAT HEAD
SPDH	STOPPING PLUG DOME HEAD
SPHH	STOPPING PLUGE HEX HEAD
SPTI	STOPPING PLUG TAMPERPROOF INTERNAL
SPTE	STOPPING PLUG NON TAMPERPROOF EXTERNAL

TABLE C

Material	
BR	BRASS
BN	BRASS NICKEL PLATED
BE	BRASS ELECTORLESS NICKEL PLATED
SS	STAINLESS STEEL

TABLE D

Entry Thread Type	
M	METRIC
N	NPT

TABLE E

Entry Thread Size	METRIC	NPT
00	12	3/8"
01	16	1/2"
02	20	3/4"
03	25	1"
04	32	1-1/4"
05	40	1-1/2"
06	50	2"
07	63	2-1/2"
08	75	3"
09	80	3-1/2"
10	85	4"
11	90	-
12	100	-

TABLE F

Option	
OR	O-RING
NW	NYLON WASHER
FW	FIBER WASHER

* Male & Female Thread Type & Size applicable to Adaptor & Reducer Only

ATEX IECEx CE IP66 IP68

GENERAL ACCESSORIES

General Accessories	67 to 71
1) Earth Tag	67
2) Lock Nut	68
3) Serrated Washer	69
4) Shroud	70
5) Thread Seal-Nylon & Red Fiber-Washer	71

EARH TAG

Earth Tags are installed between the cable gland & equipment to provide earth bond connection.

Technical Data	
Type	Earth Tag
Standard Size	M16 to M100 (3/8" NPT to 4" NPT)
Optional Size	Other sizes avilable on request
Standard Material	Brass (BS EN 12164 / Grade CuZn39Pb3)
Optional Material	Brass Nickel Plated, Stainless Steel (316 & 316L) & Aluminium

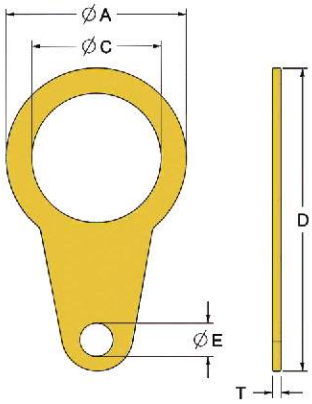

Earth Tag Selection Table

METRIC						NPT					
Reference Size C	Thickness T	Diameter A	Length D	Hole E	Product Code**	Reference Size C*	Thickness T	Diameter A	Length D	Hole E	Product Code**
M16	1.30	24.60	49.00	M6	ET01M	3/8"	1.30	24.60	49.00	M6	ET00N
M20	1.30	27.00	52.00	M6	ET02M	1/2"	1.30	27.00	52.00	M6	ET01N
M25	1.50	35.00	59.00	M6	ET03M	3/4"	1.50	35.00	59.00	M6	ET02N
M32	1.50	45.00	77.00	M12	ET04M	1"	1.50	45.00	77.00	M12	ET03N
M40	1.50	54.00	89.00	M13	ET05M	1-1/4"	1.50	54.00	89.00	M13	ET04N
M50	1.50	65.00	111.00	M13	ET06M	1-1/2"	1.50	65.00	111.00	M13	ET05N
M63	1.50	82.50	128.50	M13	ET07M	2"	1.50	82.50	128.50	M13	ET06N
M75	1.50	96.50	141.00	M13	ET08M	2-1/2"	1.50	96.50	141.00	M13	ET07N
M80	1.50	96.50	141.00	M13	ET09M	3"	2.00	113.00	159.00	M13	ET08N
M85	2.00	113.00	159.00	M13	ET10M	3-1/2"	2.00	138.00	215.00	M13	ET09N
M90	2.00	113.00	159.00	M13	ET11M	4"	2.00	135.00	199.50	M13	ET10N
M100	2.00	138.00	215.00	M13	ET12M	-	-	-	-	-	-
						-	-	-	-	-	-

All dimensions are in millimetres (Except * where dimensions are in inches)

****Product Code for Brass Material**
Please insert (BN For Brass Nickel Plated),(SS For Stainless Steel),(AL For Aluminium) after Product Code as per material requirement
e.g. : ET01M BN / ET01M SS / ET01M AL (For Metric)
e.g. : ET00N BN / ET00N SS / ET00N AL (For NPT)

export@cabexindia.com

LOCK NUT

Lock nuts are used for securing cable glands in position, used on the cable gland entry thread. In certain applications, installing cable glands directly on enclosure or equipment wall surfaces is not possible, in such situations Lock Nuts are used to secure cable glands.

Technical Data	
Type	Lock Nut
Standard Size	M16 to M100 (3/8" NPT to 4" NPT)
Optional Size	Other sizes avilable on request
Standard Material	Brass (BS EN 12164 / Grade CuZn39Pb3)
Optional Material	Brass Nickel Plated, Stainless Steel (316 & 316L) & Aluminium
Standard Thread	ISO Metric / NPT

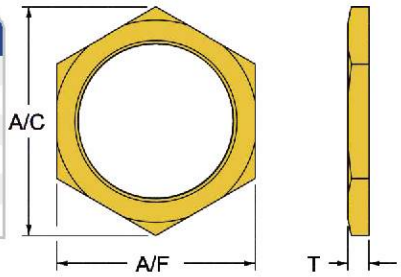

Lock Nut Selection Table

METRIC					NPT				
Thread Size	Across Flat AF	Across Corner AC	Thickness T	Product Code**	Thread Size*	Across Flat AF	Across Corner AC	Thickness T	Product Code**
M16 x 1.5	19.00	21.50	3.20	LN01M	3/8"	22.00	25.30	3.50	LN00N
M20 x 1.5	24.00	27.20	3.20	LN02M	1/2"	27.00	30.80	4.50	LN01N
M25 x 1.5	30.00	34.00	3.20	LN03M	3/4"	33.00	37.50	4.50	LN02N
M32 x 1.5	36.00	40.50	3.20	LN04M	1"	41.00	46.80	4.50	LN03N
M40 x 1.5	46.00	52.00	4.50	LN05M	1-1/4"	50.00	57.00	6.50	LN04N
M50 x 1.5	55.00	62.00	4.50	LN06M	1-1/2"	58.00	66.00	6.50	LN05N
M63 x 1.5	70.00	79.00	6.30	LN07M	2"	70.00	80.00	6.50	LN06N
M75 x 1.5	80.00	90.00	6.30	LN08M	2-1/2"	85.00	97.00	10.00	LN07N
M80 x 1.5	87.00	98.00	9.00	LN09M	3"	100.00	114.00	10.00	LN08N
M85 x 1.5	92.00	101.00	9.00	LN10M	3-1/2"	115.00	131.00	10.00	LN09N
M90 x 1.5	100.00	113.00	9.00	LN11M	4"	125.00	137.00	10.00	LN10N
M100 x 1.5	110.00	124.00	9.00	LN12M	-	-	-	-	-

All dimensions are in millimetres (Except * where dimensions are in inches)

****Product Code for Brass Material**
Please insert (BN For Brass Nickel Plated),(SS For Stainless Steel),(AL For Aluminium) after Product Code as per material requirement
e.g. : LN01M BN / LN01M SS / LN01M AL (For Metric)
e.g. : LN00N BN / LN00N SS / LN00N AL (For NPT)

SERRATED WASHER

Serrated Washer (Shake Proof) fitted inside the equipment before Locknut as anti vibration device to prevent loosening the Cable Gland from the equipment.

Technical Data	
Type	Serrated Washer
Standard Size	M16 to M100 (3/8" NPT to 3-1/2" NPT)
Optional Size	Other sizes avilable on request
Standard Material	Stainless Steel (316 & 316L)
Optional Material	Electro Galvanized Mild Steel, Hot Dip Galvanized Mild Steel

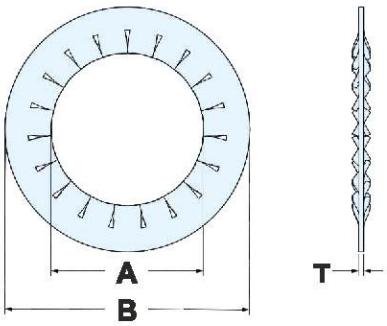

Serrated Washer Selection Table

METRIC				NPT			
Reference Size A	Diameter B	Thickness T	Product Code**	Reference Size A*	Diameter B	Thickness T	Product Code**
M16	25.50	1.00	SW01M	3/8"	25.50	1.00	SW00N
M20	32.50	1.50	SW02M	1/2"	32.50	1.50	SW01N
M25	38.00	1.50	SW03M	3/4"	38.00	1.50	SW02N
M32	48.00	1.50	SW04M	1"	48.00	1.50	SW03N
M40	60.00	1.50	SW05M	1-1/4"	60.00	1.50	SW04N
M50	76.00	1.50	SW06M	1-1/2"	76.00	1.50	SW05N
M63	90.00	1.50	SW07M	2"	90.00	1.50	SW06N
M75	105.00	1.50	SW08M	2-1/2"	105.00	1.50	SW07N
M80	105.00	1.50	SW09M	3"	120.00	1.50	SW08N
M90	120.00	1.50	SW10M	3-1/2"	135.00	1.50	SW09N
M100	135.00	1.50	SW11M	-	-	-	-

All dimensions are in millimetres (Except * where dimensions are in inches)

****Product Code for Stainless Steel Material**

Please insert (EG For Electro Galvanised Mild Steel),(HD Hot Dip Galvanised Mild Steel) after Product Code as per material requirement

e.g. : SW01M EG / SW01M HD (For Metric)

e.g. : SW00N EG / SW00N HD (For NPT)

export@cabexindia.com

SHROUD

Keeping the surface of the Cable Gland free from the build-up of dust or dirt and retain unwanted moisture. For all types of Gland application and to provide additional protection enhances the IP Rating of the Gland termination.

Technical Data	
Type	Shroud
Standard Size	Suitable to Cable Gland Sizes of M 20S/16 to M90
Optional Size	Other sizes avilable on request
Standard Material	PVC (Black), LSF (Grey)
Standard Colour	Black & Grey
Optional Colour	Available on request

Shroud Selection Table

CABLE GLAND SIZE	TYPE OF GLAND								
	BWL	A2	CW	CX	E1W	E1X	A2F	CFU	E1FU
20S/16	SRH-02	SRH-01	SRH-31	SRH-31	SRH-31	SRH-31	SRH-01	SRH-31	SRH-31
20S	SRH-02	SRH-01	SRH-32	SRH-32	SRH-32	SRH-32	SRH-03	SRH-32	SRH-32
20	SRH-06	SRH-04	SRH-33	SRH-33	SRH-33	SRH-33	SRH-05	SRH-33	SRH-33
25S	SRH-07	SRH-06	SRH-34	SRH-34	SRH-34	SRH-34	SRH-06	SRH-34	SRH-34
25	SRH-07	SRH-07	SRH-35	SRH-35	SRH-35	SRH-35	SRH-07	SRH-35	SRH-35
32	SRH-10	SRH-08	SRH-36	SRH-36	SRH-36	SRH-36	SRH-09	SRH-36	SRH-36
40	SRH-13	SRH-11	SRH-37	SRH-37	SRH-37	SRH-37	SRH-12	SRH-37	SRH-37
50S	SRH-15	SRH-13	SRH-38	SRH-38	SRH-38	SRH-38	SRH-14	SRH-38	SRH-38
50	SRH-17	SRH-15	SRH-39	SRH-39	SRH-39	SRH-39	SRH-16	SRH-39	SRH-39
63S	SRH-19	SRH-17	SRH-40	SRH-40	SRH-40	SRH-40	SRH-18	SRH-40	SRH-40
63	SRH-20	SRH-18	SRH-41	SRH-41	SRH-41	SRH-41	SRH-20	SRH-41	SRH-41
75S	SRH-23	SRH-20	SRH-42	SRH-42	SRH-42	SRH-42	SRH-21	SRH-42	SRH-42
75	SRH-24	SRH-22	SRH-43	SRH-43	SRH-43	SRH-43	SRH-23	SRH-43	SRH-43
90	SRH-26	SRH-25	SRH-44	SRH-44	SRH-44	SRH-44	SRH-25	SRH-44	SRH-44

THREAD SEAL NYLON & RED FIBER WASHER

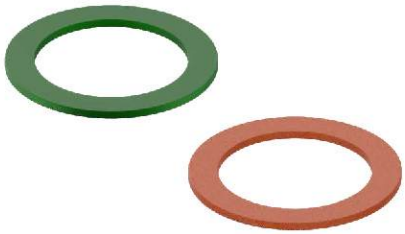

These Washers need to be fit at entry thread at entrance of Cable Gland to equipment to maintain the Ingress Protection rating and code of protection. Manufactured from high grade material & tested with Cable Gland as per EN 62444 & obtained IP 66, IP 67, IP 68 level of protection.

Technical Data	
Type	Thread Seal-Nylon & Red Fiber Washer
Standard Size	M16 to M100 (3/8" NPT to 4" NPT)
Optional Size	Other sizes avilable on request
Operating Temprature	-60° C to + 85° C (Nylon) & -60° C to + 160° C (Red Fiber)
Ingress Protection Rating	IP 66 / IP 67 / IP 68
Standard Material	Nylon 66 & Red Fiber
Standard Colour	Nylon -Green , Fiber- Red

Nylon Thread Seal Washer Selection Table

METRIC				NPT			
Reference Size A	Diameter B	Thickness T	Product Code	Reference Size A*	Diameter B	Thickness T	Product Code
M16	25.00	1.50	NW01M	3/8"	25.00	1.50	NW00N
M20	30.00	1.50	NW02M	1/2"	30.00	1.50	NW01N
M25	36.00	1.50	NW03M	3/4"	36.00	1.50	NW02N
M32	45.00	1.50	NW04M	1"	45.00	1.50	NW03N
M40	56.00	1.50	NW05M	1-1/4"	56.00	1.50	NW04N
M50	65.00	1.50	NW06M	1-1/2"	65.00	1.50	NW05N
M63	80.00	1.50	NW07M	2"	80.00	1.50	NW06N
M75	95.00	1.50	NW08M	2-1/2"	95.00	1.50	NW07N
M80	95.00	1.50	NW09M	3"	106.00	1.50	NW08N
M85	95.00	1.50	NW10M	3-1/2"	120.00	1.50	NW09N
M90	106.00	1.50	NW11M	4"	140.00	2.00	NW10N
M100	120.00	1.50	NW12M	-	-	-	-

All dimensions are in millimetres (Except * where dimensions are in inches)

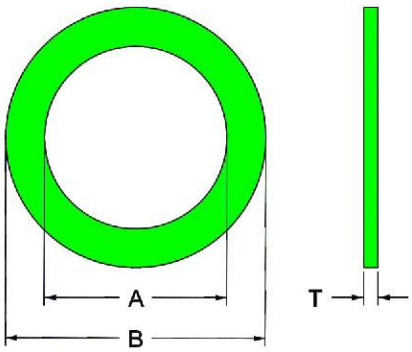

Red Fiber Thread Seal Washer Selection Table

METRIC				NPT			
Reference Size A	Diameter B	Thickness T	Product Code	Reference Size A*	Diameter B	Thickness T	Product Code
M16	25.00	1.50	FW01M	3/8"	25.00	1.50	FW00N
M20	28.00	1.50	FW02M	1/2"	28.00	1.50	FW01N
M25	35.00	1.50	FW03M	3/4"	35.00	1.50	FW02N
M32	45.00	1.50	FW04M	1"	45.00	1.50	FW03N
M40	51.00	1.50	FW05M	1-1/4"	51.00	1.50	FW04N
M50	63.50	1.50	FW06M	1-1/2"	63.50	1.50	FW05N
M63	75.00	1.50	FW07M	2"	75.00	1.50	FW06N
M75	90.00	1.50	FW08M	2-1/2"	90.00	1.50	FW07N
M80	105.00	1.50	FW09M	3"	111.50	1.50	FW08N
M85	105.00	1.50	FW10M	3-1/2"	127.50	1.50	FW09N
M90	111.50	1.50	FW11M	4"	140.00	2.00	FW10N
M100	127.50	1.50	FW12M	-	-	-	-

All dimensions are in millimetres (Except * where dimensions are in inches)

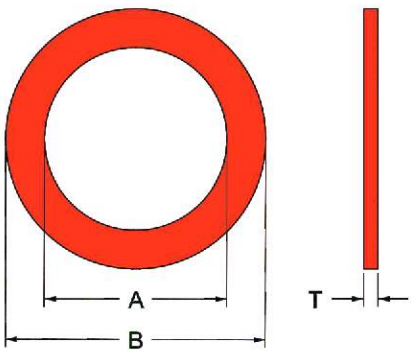

export@cabexindia.com

Cable Ties	74 to 77
1) Ball Lock Type Cable Tie	74
2) Ladder Type Cable Tie	75
3) Releasable Type Cable Tie	76
4) Bands, Markers, Tags	77

export@cabexindia.com

BALL LOCK TYPE CABLE TIES

Ball Lock Cable Ties provides a strong, durable bundling and fastening. Low weight, high strength of roller ball are designed for use in application where strength, vibration, weathering, corrosion extremes are a factor. It is more efficient and reliable than conventional fasteners.

Technical Data	
Type	Ball Lock Type (Roller Ball Un-coated and Coated)
Standard Size	4.6 mm & 7.9 mm Width
Optional Size	12 mm & 16 mm Width
Operating Temprature	Approx : -80°C to +538°C (Un-coated) and -80°C to +150°C (Coated)
Standard Material	SS316 and SS304
Min Loop Tensile Strength	130 lbs for 4.6mm width Un-coated 270 lbs for 7.9mm width Un-coated 110 lbs for 4.6mm width Coated 200 lbs for 7.9mm width Coated

Selection Table Of Ball Lock Ties

Roller Ball Un-Coated

Width (mm)	Length* (mm)	Maximum Bundle Dia. (mm)	Code**
4.6	100	20	BLU46-316-100
4.6	125	30	BLU46-316-125
4.6	150	35	BLU46-316-150
4.6	200	50	BLU46-316-200
4.6	250	70	BLU46-316-250
4.6	300	85	BLU46-316-300
4.6	360	100	BLU46-316-360
4.6	450	130	BLU46-316-450
4.6	520	155	BLU46-316-520
4.6	680	200	BLU46-316-680
4.6	840	255	BLU46-316-840
4.6	1000	305	BLU46-316-1000

Roller Ball Coated

Width (mm)	Length* (mm)	Maximum Bundle Dia. (mm)	Code**
4.6	100	20	BLC46-316-100
4.6	125	30	BLC46-316-125
4.6	150	35	BLC46-316-150
4.6	200	50	BLC46-316-200
4.6	250	70	BLC46-316-250
4.6	300	85	BLC46-316-300
4.6	360	100	BLC46-316-360
4.6	450	130	BLC46-316-450
4.6	520	155	BLC46-316-520
4.6	680	200	BLC46-316-680
4.6	840	255	BLC46-316-840
4.6	1000	305	BLC46-316-1000

Roller Ball Un-Coated

Width (mm)	Length* (mm)	Maximum Bundle Dia. (mm)	Code**
7.9	100	20	BLU79-316-100
7.9	125	30	BLU79-316-125
7.9	150	35	BLU79-316-150
7.9	200	50	BLU79-316-200
7.9	250	70	BLU79-316-250
7.9	300	85	BLU79-316-300
7.9	360	100	BLU79-316-360
7.9	450	130	BLU79-316-450
7.9	520	155	BLU79-316-520
7.9	680	200	BLU79-316-680
7.9	840	255	BLU79-316-840
7.9	1000	305	BLU79-316-1000

Roller Ball Coated

Width (mm)	Length* (mm)	Maximum Bundle Dia. (mm)	Code**
7.9	100	20	BLC79-316-100
7.9	125	30	BLC79-316-125
7.9	150	35	BLC79-316-150
7.9	200	50	BLC79-316-200
7.9	250	70	BLC79-316-250
7.9	300	85	BLC79-316-300
7.9	360	100	BLC79-316-360
7.9	450	130	BLC79-316-450
7.9	520	155	BLC79-316-520
7.9	680	200	BLC79-316-680
7.9	840	255	BLC79-316-840
7.9	1000	305	BLC79-316-1000

*Other lengths are available on request.
**Codes for SS316 material, If you need SS304 material then mention - e.g. BLU46-304-100 (For Uncoated) & BLC46-304-100 (For Coated)

Other colour coating available upon request.

LADDER TYPE CABLE TIES

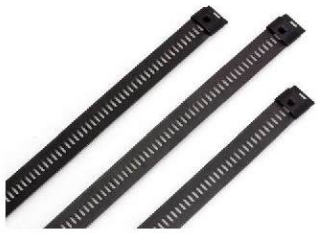

Ladder Type Ties are as strong as Ball Lok Type Cable Ties. The unique locking design on the strip can be applied without any crimping tool. The Ladder Type Ties are designed for self locking fast and easy application. Coated Ties are recommended for added resistance to corrosion, chemical and weathering effects.

Technical Data	
Type	Ladder Type (Un-coated and Coated)
Standard Size	7 mm & 12 mm Width
Operating Temprature	Approx : -80°C to +538°C (Un-coated) and -80°C to +150°C (Coated)
Standard Material	SS316 and SS304
Min Loop Tensile Strength	100 lbs for 7mm width 200 lbs for 12mm width

Selection Table Of Ladder Ties

Ladder Ties Un-coated

Width (mm)	Length* (mm)	Maximum Bundle Dia. (mm)	Code**
7	100	20	LU7-316-100
7	150	35	LU7-316-150
7	200	50	LU7-316-200
7	250	70	LU7-316-250
7	300	85	LU7-316-300
7	360	100	LU7-316-360
7	450	130	LU7-316-450
7	550	165	LU7-316-550
7	610	180	LU7-316-610
7	680	200	LU7-316-680
7	840	255	LU7-316-840
7	900	275	LU7-316-900
7	1000	305	LU7-316-1000
7	1200	370	LU7-316-1200

Ladder Ties Coated

Width (mm)	Length* (mm)	Maximum Bundle Dia. (mm)	Code**
7	100	20	LC7-316-100
7	150	35	LC7-316-150
7	200	50	LC7-316-200
7	250	70	LC7-316-250
7	300	85	LC7-316-300
7	360	100	LC7-316-360
7	450	130	LC7-316-450
7	550	165	LC7-316-550
7	610	180	LC7-316-610
7	680	200	LC7-316-680
7	840	255	LC7-316-840
7	900	275	LC7-316-900
7	1000	305	LC7-316-1000
7	1200	370	LC7-316-1200

Ladder Ties Un-coated

Width (mm)	Length* (mm)	Maximum Bundle Dia. (mm)	Code**
12	100	20	LU12-316-100
12	150	35	LU12-316-150
12	200	50	LU12-316-200
12	250	70	LU12-316-250
12	300	85	LU12-316-300
12	360	100	LU12-316-360
12	450	130	LU12-316-450
12	550	165	LU12-316-550
12	610	180	LU12-316-610
12	680	200	LU12-316-680
12	840	255	LU12-316-840
12	900	275	LU12-316-900
12	1000	305	LU12-316-1000
12	1200	370	LU12-316-1200

Ladder Ties Coated

Width (mm)	Length* (mm)	Maximum Bundle Dia. (mm)	Code**
12	100	20	LC12-316-100
12	150	35	LC12-316-150
12	200	50	LC12-316-200
12	250	70	LC12-316-250
12	300	85	LC12-316-300
12	360	100	LC12-316-360
12	450	130	LC12-316-450
12	550	165	LC12-316-550
12	610	180	LC12-316-610
12	680	200	LC12-316-680
12	840	255	LC12-316-840
12	900	275	LC12-316-900
12	1000	305	LC12-316-1000
12	1200	370	LC12-316-1200

*Other lengths are available on request.
**Codes for SS316 material, If you need SS304 material then mention - e.g. LU7-304-100 (For Uncoated) & LC7-304-100 (For Coated)

export@cabexindia.com

RELEASABLE TYPE CABLE TIES

Releasable Type Ties provides easy and quick installation because of its unique design with buckle. Coated ties have better weathering properties with excellent resistance to corrosion, radiation and abrasion.

Technical Data	
Type	Releasable Type (Un-coated and Coated)
Standard Size	6.3 mm & 9.5 mm Width
Operating Temprature	Approx : -40°C to +325°C (Un-coated) and -60°C to +170°C (Coated)
Standard Material	SS316 and SS304
Min Loop Tensile Strength	400 lbs for 6.3mm width (Un-coated & Coated) 500 lbs for 9.5mm width (Un-coated & Coated)

Selection Table Of Releasable Ties

Releasable Un-Coated				Releasable Coated			
Width (mm)	Length* (mm)	Maximum Bundle Dia. (mm)	Code**	Width (mm)	Length* (mm)	Maximum Bundle Dia. (mm)	Code**
6.3	150	35	RU63-316-150	6.3	150	35	RC63-316-150
6.3	230	60	RU63-316-230	6.3	230	60	RC63-316-230
6.3	250	75	RU63-316-250	6.3	250	75	RC63-316-250
6.3	300	85	RU63-316-300	6.3	300	85	RC63-316-300
6.3	330	95	RU63-316-330	6.3	330	95	RC63-316-330
6.3	400	115	RU63-316-400	6.3	400	115	RC63-316-400
6.3	450	130	RU63-316-450	6.3	450	130	RC63-316-450
6.3	520	155	RU63-316-520	6.3	520	155	RC63-316-520
6.3	630	190	RU63-316-630	6.3	630	190	RC63-316-630
6.3	760	230	RU63-316-760	6.3	760	230	RC63-316-760
6.3	800	240	RU63-316-800	6.3	800	240	RC63-316-800
6.3	850	260	RU63-316-850	6.3	850	260	RC63-316-850
6.3	1000	300	RU63-316-1000	6.3	1000	300	RC63-316-1000

Releasable Un-Coated				Releasable Coated			
Width (mm)	Length* (mm)	Maximum Bundle Dia. (mm)	Code**	Width (mm)	Length* (mm)	Maximum Bundle Dia. (mm)	Code**
9.5	150	35	RU95-316-150	9.5	150	35	RC95-316-150
9.5	230	60	RU95-316-230	9.5	230	60	RC95-316-230
9.5	250	75	RU95-316-250	9.5	250	75	RC95-316-250
9.5	300	85	RU95-316-300	9.5	300	85	RC95-316-300
9.5	330	95	RU95-316-330	9.5	330	95	RC95-316-330
9.5	400	115	RU95-316-400	9.5	400	115	RC95-316-400
9.5	450	130	RU95-316-450	9.5	450	130	RC95-316-450
9.5	520	155	RU95-316-520	9.5	520	155	RC95-316-520
9.5	630	190	RU95-316-630	9.5	630	190	RC95-316-630
9.5	760	230	RU95-316-760	9.5	760	230	RC95-316-760
9.5	800	240	RU95-316-800	9.5	800	240	RC95-316-800
9.5	850	260	RU95-316-850	9.5	850	260	RC95-316-850
9.5	1000	300	RU95-316-1000	9.5	1000	300	RC95-316-1000

*Other lengths are available on request.
**Codes for SS316 material, If you need SS304 material then mention - e.g. RU63-304-150 (For Uncoated) & RC63-304-150 (For Coated)

SS BANDS : SS201 is generally used for this application. Bands with widths of 6.35mm, 9.53mm, 12.7mm, 15.88mm, 19.01mm, 25mm and thickness of 0.38mm with various lengths are available.

SS MARKERS & TAGS : SS Marking system is available for effortless and permanent identification of cable accessories or ducting system. The system can be applied with Ball Lock Type or Ladder Type SS cable ties.

Selection Table Of SS Mark & Tag

Description	Width X Length (mm)	Code
Tag	34 X 63	T-3463
Tag	19 X 51	T-1951
Tag	19 X 89	T-1989
Tag	19 X 92	T-1992
Tag	8 X 92	T-892
Tag	8 X 133	T-8133
Tag	8 X 166	T-8166
Alphabets	8 X 9	A TO Z
Numbers	8 X 9	0 TO 9
Special Characters	8 X 9	+, -, #, @, etc.
Tags are available in SS316 and SS304		
Customized sizes are available in Markers & Tags		

export@cabexindia.com

Bushes	80
1) Male Bush-Short	80
2) Male Bush-Long	80
3) Female Bush	80
Locknuts	80
1) Hex Locknut-Light (Hot Dip - Galavanised)	80
2) Hex Locknut-Light (Electro - Galavanised)	80
3) Hex Locknut-Heavy (Hot Dip - Galavanised)	80
4) Hex Locknut-Heavy (Electro - Galavanised)	80
Plugs	80
1) Stopping Plug Hex Head	80
2) Stopping Plug Slotted Head	80
Locking Ring	80
Adaptors	81
1) Male Adaptor with Screw	81
2) Female Adaptor with Screw	81
3) Male Thread Straight Fitting	81
4) Female Thread Straight Fitting	81
5) Male Thread Swivel Fitting	81
6) Liquid Tight Straight Fitting - Male Thread	81
7) Entry Busy	81
Reducers	81

Flexible Conduits	82
1) Flexible Conduit with Black PVC	82
2) Flexible Conduit without Black PVC	82
Saddles	82
1) Plain Saddle (Electro-Galavanised)	82
2) Plain Saddle (Hot Dip-Galavanised)	82
3) Bar Saddle (Electro-Galavanised)	82
4) Bar Saddle (Hot Dip-Galavanised)	82
Couplings	82
1) Coupling (Electro-Galavanised)	82
2) Coupling (Hot Dip-Galavanised)	82

export@cabexindia.com

BUSHES

MALE BUSH-SHORT

Item Code	Size (mm)
MBS20	20
MBS25	25
MBS32	32
MBS40	1-1/2"
MBS50	2"

Material : Brass

MALE BUSH-LONG

Item Code	Size (mm)
MBL20	20
MBL25	25
MBL32	32
MBL40	1-1/2"
MBL50	2"

Material : Brass

FEMALE BUSH

Item Code	Size (mm)
FB20	20
FB25	25
FB32	32
FB40	1-1/2"
FB50	2"

Material : Brass

PLUGS

STOPPING PLUG HEXAGONAL HEAD

Item Code	Size (mm)
SPH20	20
SPH25	25
SPH32	32

Material : Brass

STOPPING PLUG SLOTTED HEAD

Item Code	Size (mm)
SPS20	20
SPS25	25
SPS32	32

Material : Brass

LOCKNUTS

HEXAGONAL LOCKNUT - LIGHT

Item Code	Size (mm)
HLLH20	20 x 3 (t)
HLLH25	25 x 3 (t)
HLLH32	32 x 3 (t)
HLLH40	1-1/2" x 3 (t)
HLLH50	2" x 3 (t)

Material : Steel | Finish : Hot-Dip Galvanised

HEXAGONAL LOCKNUT - LIGHT

Item Code	Size (mm)
HLLE20	20 x 3 (t)
HLLE25	25 x 3 (t)
HLLE32	32 x 3 (t)
HLLE40	1-1/2" x 3 (t)
HLLE50	2" x 3 (t)

Material : Steel | Finish : Electro-Galvanised

HEXAGONAL LOCKNUT - HEAVY

Item Code	Size (mm)
HLHH20	20 x 6 (t)
HLHH25	25 x 6 (t)
HLHH32	32 x 6 (t)

Material : Malleable Iron | Finish : Hot-Dip Galvanised

HEXAGONAL LOCKNUT - HEAVY

Item Code	Size (mm)
HLHE20	20 x 6 (t)
HLHE25	25 x 6 (t)
HLHE32	32 x 6 (t)

Material : Malleable Iron | Finish : Electro-Galvanised

LOCKING RING

LOCKING RING

Item Code	Size (mm)
LR20	20
LR25	25
LR32	32

Material : Steel | Finish : Electro-Galvanised

CABEX

ADAPTORS

MALE ADAPTOR WITH SCREW

Item Code	Size (mm)
MA20S	20 x 20
MA25S	25 x 25
MA32S	32 x 32
MA40S	1-1/2" x 1-1/2"
MA50S	2" x 2"

Material : Brass

MALE THREAD STRAIGHT FITTING

Item Code	Size (mm)
AMSC10	10
AMSC12	12
AMSC16	16
AMSC20	20
AMSC25	25
AMSC32	32
AMSC40	40
AMSC50	50
AMSC63	63
AMSC75	75

Material : Brass | Finish : Nickle Plated

MALE THREAD SWIVEL FITTING

Item Code	Size (mm)
ASJC20	20
ASJC25	25
ASJC32	32
ASJC40	1-1/2"
ASJC50	2"

Material : Brass | Finish : Nickle Plated

ENTRY BUSH

Item Code	Size (mm)
EBA10	10
EBA12	12
EBA16	16
EBA20	20
EBA24	24
EBA32	32
EBA40	40
EBA50	50
EBA63	63
EBA75	75

Material : Brass | Finish : Nickle Plated

ADAPTORS

FEMALE ADAPTOR WITH SCREW

Item Code	Size (mm)
FA20S	20 x 20
FA25S	25 x 25
FA32S	32 x 32
FA40S	1-1/2" x 1-1/2"
FA50S	2" x 2"

Material : Brass

FEMALE THREAD STRAIGHT FITTING

Item Code	Size (mm)
AFSC16	16
AFSC20	20
AFSC25	25
AFSC32	32
AFSC40	40
AFSC50	50

Material : Brass | Finish : Nickle Plated

LIQUID TIGHT STRAIGHT FITTING MALE THREAD

Item Code	Size (mm)
LTA20	20
LTA25	25
LTA32	32

Material : Brass | Finish : Nickle Plated

REDUCERS

REDUCER

Item Code	Size (mm)
RDC2025	20 x 25
RDC2032	20 x 32
RDC3225	32 x 25

Material : Brass

export@cabexindia.com

FLEXIBILE CONDUIT

FLEXIBLE CONDUIT WITH BLACK PVC

Item Code	Size (mm)
FCP20	20
FCP25	25
FCP32	32
FCP40	1-1/2"
FCP50	2"

Material : Steel (For Flexible conduit) PVC (For Sheath)
Finish : Electro-Galvanised (For Flexible Conduit)

SADDLES

PLAIN SADDLE

Item Code	Size (mm)
PSE20	20
PSE25	25
PSE32	32
PSE40	40
PSE50	50

Material : Steel | Finish : Electro -Galvanised

PLAIN SADDLE

Item Code	Size (mm)
PSH20	20
PSH25	25
PSH32	32
PSH40	40
PSH50	50

Material : Steel | Finish : Hot Dip -Galvanised

COUPLINGS

Item Code	Size (mm)
CPE20	20
CPE25	25
CPE32	32
CPE40	40
CPE50	50

Material : Steel | Finish : Electro -Galvanised

FLEXIBILE CONDUIT

FLEXIBLE CONDUIT WITHOUT BLACK PVC

Item Code	Size (mm)
FC20	20
FC25	25
FC32	32
FC40	1-1/2"
FC50	2"

Material : Steel | Finish : Electro-Galvanised

SADDLES

BAR SADDLE

Item Code	Size (mm)
BSE20	20
BSE25	25
BSE32	32
BSE40	40
BSE50	50

Material : Steel | Finish : Electro -Galvanised

BAR SADDLE

Item Code	Size (mm)
BSH20	20
BSH25	25
BSH32	32
BSH40	40
BSH50	50

Material : Steel | Finish : Hot Dip -Galvanised

COUPLINGS

Item Code	Size (mm)
CPH20	20
CPH25	25
CPH32	32
CPH40	40
CPH50	50

Material : Steel | Finish : Hot Dip-Galvanised

WE PLAN BETTER
WE BUILD BETTER

Scan to Visit Website :

Scan to Download Catalogue :

MFG BY : **CABEX ELECTRICAL COMPONENTS**

Plot No.: 4, GIDC Phase - ||, Dared, Jamnagar- 361 004. (GUJ) INDIA.

Email : export@cabexindia.com | Website: www.cabexindia.com

Customer Care No.: +91 99782 22330